Theory and Applications of Categories, Vol. 11, No. 2, 2003, pp. 15–74.

MORPHISMS AND MODULES FOR POLY-BICATEGORIES

J.R.B. COCKETT, J. KOSLOWSKI, AND R.A.G. SEELY

ABSTRACT. Linear bicategories are a generalization of ordinary bicategories in which there are two horizontal (1-cell) compositions corresponding to the "tensor" and "par" of linear logic. Benabou's notion of a morphism (lax 2-functor) of bicategories may be generalized to linear bicategories, where they are called linear functors. Unfortunately, as for the bicategorical case, it is not obvious how to organize linear functors smoothly into a higher dimensional structure. Not only do linear functors seem to lack the two compositions expected for a linear bicategory but, even worse, they inherit from the bicategorical level the failure to combine well with the obvious notion of transformation. As we shall see, there are also problems with lifting the notion of lax transformation to the linear setting.

One possible resolution is to step up one dimension, taking morphisms as the 0-cell level. In the linear setting, this suggests making linear functors 0-cells, but what structure should sit above them? Lax transformations in a suitable sense just do not seem to work very well for this purpose (Section 5). Modules provide a more promising direction, but raise a number of technical issues concerning the composability of both the modules and their transformations. In general the required composites will not exist in either the linear bicategorical or ordinary bicategorical setting. However, when these composites do exist modules between linear functors do combine to form a linear bicategory. In order to better understand the conditions for the existence of composites, we have found it convenient, particularly in the linear setting, to develop the theory of "poly-bicategories". In this setting we can develop the theory so as to extract the answers to these problems not only for linear bicategories but also for ordinary bicategories.

Poly-bicategories are 2-dimensional generalizations of Szabo's poly-categories, consisting of objects, 1-cells, and poly-2-cells. The latter may have several 1-cells as input and as output and can be composed by means of cutting along a single 1-cell. While a poly-bicategory does not require that there be any compositions for the 1-cells, such composites are determined (up to 1-cell isomorphism) by their universal properties. We say a poly-bicategory is representable when there is a representing 1-cell for each of the two possible 1-cell compositions geared towards the domains and codomains of the poly 2-cells. In this case we recover the notion of a linear bicategory. The poly notions of functors, modules and their transformations are introduced as well. The poly-functors between two given poly-bicategories $\mathbf{P}$ and $\mathbf{P}'$ together with poly-modules between poly-functors and their transformations form a new poly-bicategory provided $\mathbf{P}$ is representable and closed in the sense that every 1-cell has both a left and a right

The research of the first author is partially supported by NSERC, Canada, and of the third by NSERC as well as Le Fonds FCAR, Québec. Diagrams in this paper were produced with the help of the *XY-pic* macros of K. Rose and R. Moore and the *diagxy* macros of M. Barr.

Received by the editors 2002-03-20 and, in revised form, 2003-02-11.

Transmitted by Ross Street. Published on 2003-02-14.

2000 Mathematics Subject Classification: 18D05, 03F52, 16D90.

Key words and phrases: Bicategories, polycategories, multicategories, modules, representation theorems.

© J.R.B. Cockett, J. Koslowski, and R.A.G. Seely, 2003. Permission to copy for private use granted.

adjoint (in the appropriate linear sense). Finally we revisit the notion of linear (or lax) natural transformations, which can only be defined for representable poly-bicategories. These in fact correspond to modules having special properties.

Introduction

Linear bicategories [6] were introduced as a natural 2-dimensional extension of *linearly distributive categories* [7]. When compared to ordinary bicategories, the most striking feature is the presence of two "global" (as opposed to "local", inside the hom-categories) compositions $\mathbf{B}\langle A, B\rangle \times \mathbf{B}\langle B, C\rangle \longrightarrow \mathbf{B}\langle A, C\rangle$ or tensors $\otimes$ ("tensor") and $\oplus$ ("par", to remind us of the connection with Girard's linear logic, even though we do not use his notation). These are subject to certain compatibility conditions. Together with their respective units $\top$ and $\bot$, they yield two bicategory structures on the same class of objects, 1-cells and 2-cells that display a high degree of symmetry.

There are many examples of linear bicategories (some of which are described in [6]). A motivating example for us was provided in [16]: the Chu construction applied to a closed bicategory with local pullbacks produces a linear bicategory. In this paper we provide a further generalization of the Chu construction (section 2) which shows how one may construct a (cyclic) poly-bicategory from an (arbitrary multi-)bicategory.

The appropriate morphisms between linearly distributive categories are the linear functors of Cockett and Seely [8, 3]; these can be generalized to linear bicategories in a straightforward manner [6]. A linear functor between linear bicategories actually consists of two coherently linked morphisms which agree on the 0-cells, one of which is lax with respect to tensor composition while the other is colax with respect to the par composition.

An important concept in this context is the notion of *linear adjunction*. 1-cells with a common left and right linear adjoint, or "cyclic linear adjoints", lead to the consideration of "linear monads" that combine the one-sided concept of a monad with that of a comonad to form a self-dual notion. These may also be viewed as linear functors from the final linear bicategory $\mathbf{1}$ into the given linear bicategory in much the same way as a monad in an ordinary bicategory may be viewed as a lax functor with final domain. There are two possible choices for morphisms between linear monads: "linear natural transformations", generalizing lax natural transformations between morphisms (*i.e.* lax functors) of bicategories, or "linear modules", generalizing the familiar notion of (bi-)module between monads.

An initial goal for this paper was to organize the linear monads of a linear bicategory $\mathbf{B}$ with appropriate 1- and 2-cells into a new linear bicategory. Unfortunately, both candidates for 1-cells have shortcomings. Linear natural transformations and their modifications only admit one global composition and thus cannot produce a non-degenerate linear bicategory. On the other hand, the required two global compositions of linear modules and their transformations only exist if $\mathbf{B}$ locally has reflexive coequalizers and reflexive equalizers that are preserved by $\otimes$ and $\oplus$, respectively. We were aware, however, that the corresponding existential requirement for bicategories could be elegantly

avoided by dispensing with the global composition and considering "multi-2-cells" with a finite sequence of inputs, but just one output. This yields a 2-dimensional generalization of "multi-categories", as introduced by Lambek [19], that (together with double categories) is subsumed by Tom Leinster's "fc-multi-categories" [20]. Parallel to Szabo's [26] generalization of multi-categories to "poly-categories" (with finite strings of objects as inputs and outputs), it was natural to consider generalizing these "multi-bicategories" to "poly-bicategories", and to use these to provide a smooth theory of modules in the linear setting. This had the additional appeal for us, in that tacitly we were already employing poly-bicategories in the circuit diagrams we used for reasoning about linear bicategories in [6].

Let us recall the "logical" origins of linearly distributive categories and linear bicategories. Initially Cockett and Seely had considered a sequent calculus (for the tensor–par fragment of linear logic) with an input–output symmetry: the desire to model Gentzen's cut rule categorically then motivated the introduction of linearly distributive categories [7]. The definition proceeded *via* the poly-categories mentioned above. Although not explicitly stressed in the definition [6], linear bicategories have a similar underlying (albeit 2-dimensional) structure. We introduce this in Section 1 under the name "poly-bicategory". Gentzen's cut then provides the "local" composition of "poly-2-cells". In contrast to the situation for multi-bicategories, poly-bicategories provide a natural setting for a notion of adjunction. A corresponding calculus of Australian mates is available as well.

In Section 2, we adapt an insight of Claudio Hermida [13], who had, in particular, noticed that the coherence requirements for bicategories can usefully be expressed in terms of the universal multi-properties expected of composite 1-cells. In the same manner the coherence issues for linear bicategories can alternately be expressed in terms of the universal poly-properties expected of the global compositions $\otimes$ and $\oplus$ and their respective units $\top$ and $\bot$. We then recover linear bicategories as "representable poly-bicategories" with chosen representing poly-2-cells for all these universal properties.

Besides showing that linear monads in a linear bicategory $\mathbf{B}$ together with linear modules and their transformations form a poly-bicategory, we wanted to go further, not only by dropping representability requirements as far as possible, but also by generalizing from linear monads to arbitrary linear functors. In Section 3 we generalize the latter to "poly-functors" between poly-bicategories, which yield "poly-monads" when the domain is restricted to $\mathbf{1}$. (An alternative description arising from cyclic adjoints requires representability.)

Initially, it was not obvious how modules between poly-functors should work. Arriving at a suitable understanding of this matter is at the heart of this paper, and it must be noted that this has implications even for the more familiar bicategorical setting. It is perhaps worth recalling that a widely accepted notion of module between morphisms, or lax functors, of bicategories competing with that of lax natural transformation is still lacking. For example, Walters [27] considers modules between "categories enriched in a bicategory". The latter are rather special lax functors whose domains are "locally punctual" bicategories (= chaotic categories) and were already introduced by Benabou

[1] under the name "polyad". So the results in the present paper have implications which are not widely known even at the bicategorical level. We shall "track" the applications to the bicategorical level in a series of remarks.

We introduce poly-modules and their transformations in Section 4. The latter admit a cut operation, provided $\mathbf{P}$ is representable and every 1-cell has a left and a right adjoint. In the representable case the last condition amounts to the closedness of $\mathbf{P}$. In terms of circuit diagrams, the existence of all adjoints allows us to "bend wires out of the way". In the multi-categorical setting, where fewer configurations for cuts are possible, such "bending" is not necessary. Therefore here the representability of the domain multi-bicategory suffices to ensure that "multi-module transformations" may be cut. We then discuss general conditions under which this construction produces a representable poly-bicategory. In particular, we show how these conditions specialize for the case of linear monads to the representability of the codomain poly-bicategory and the existence of reflexive equalizers and coequalizers which are preserved, respectively, by the par and tensor.

Finally, in Section 5 we reconsider linear natural transformations, which we had abandoned in favor of poly-modules. Their definition requires tensors and pars to be chosen in $\mathbf{P}$, so this is really only suitable for linear bicategories (rather than for poly-bicategories). If $\mathbf{P}$ also has all left and right adjoints, linear natural transformations give rise to certain cyclic adjoint poly-modules, thus placing them in a context which allows both compositions.

A fact [1, 12] that seems sometimes to be forgotten is that "whiskering" of lax natural transformations with a lax functor on the codomain side does not, in general, produce a lax natural transformation. We are grateful to an (anonymous) referee for pointing this out to us. The prospect of restricting attention to the linear counterparts of homomorphisms (= pseudo functors) between bicategories and pseudo natural transformations (with isomorphisms as 2-cell components) in order to secure this composition of the transformations between linear morphisms, as in the tricategory **Bicat** [11], seemed like a very unattractive option. After all, the lax-ness of the components of a linear functor is an essential feature. This provided us with considerable motivation to develop the notion of a poly-module which could support two compositions in order to subsume linear natural transformations.

1. Poly-bicategories

Let us recall the sequent rules for a logic of generalized relations between typed formulas $A \xrightarrow{x} B$ that motivated the introduction of linear bicategories [6], *cf.* Table 1.

Interpreting the typed formulas as 1-cells and the entailments between tensored antecedents and par-ed conclusions as (possibly labeled) 2-cells, one arrives at the notion of linear bicategory. The latter four "bijective" rules correspond to the bicategory-axioms for global compositions $\otimes$ with unit $\top$ and $\oplus$ with unit $\bot$, together with the existence of certain structural 2-cells, the so-called "linear distributivities". Poly-bicategories are

$$\frac{}{x^{A\to B} \vdash x^{A\to B}}\ (id)$$

$$\frac{\Gamma \vdash \Delta_0, x^{A\to B}, \Delta_1 \quad x^{A\to B} \vdash \Delta}{\Gamma \vdash \Delta_0, \Delta, \Delta_1}\ (\mathrm{cut}_0) \qquad \frac{\Gamma \vdash x^{A\to B} \quad \Gamma_0, x^{A\to B}, \Gamma_1 \vdash \Delta}{\Gamma_0, \Gamma, \Gamma_1 \vdash \Delta}\ (\mathrm{cut}_1)$$

$$\frac{\Gamma_1 \vdash x^{A\to B}, \Delta_1 \quad \Gamma_0, x^{A\to B} \vdash \Delta_0}{\Gamma_0, \Gamma_1 \vdash \Delta_0, \Delta_1}\ (\mathrm{cut}_2) \qquad \frac{\Gamma_0 \vdash \Delta_0, x^{A\to B} \quad x^{A\to B}, \Gamma_1 \vdash \Delta_1}{\Gamma_0, \Gamma_1 \vdash \Delta_0, \Delta_1}\ (\mathrm{cut}_3)$$

Note: These are just the four "planar" variants of the usual cut rule.

$$\frac{\Gamma, x^{A\to B}, y^{B\to C}, \Gamma' \vdash \Delta}{\Gamma, x \otimes y^{A\to C}, \Gamma' \vdash \Delta}\ (\otimes) \qquad \frac{\Gamma \vdash \Delta, x^{A\to B}, y^{B\to C}, \Delta'}{\Gamma \vdash \Delta, x \oplus y^{A\to C}, \Delta'}\ (\oplus)$$

$$\frac{\Gamma, \Gamma' \vdash \Delta}{\Gamma, \top^{A\to A}, \Gamma' \vdash \Delta}\ (\top) \qquad \frac{\Gamma \vdash \Delta, \Delta'}{\Gamma \vdash \Delta, \bot^{A\to A}, \Delta'}\ (\bot)$$

The double horizontal line indicates that the inference may go either direction (top to bottom or bottom to top), *i.e.* these rules are "bijective".

Table 1: Sequent rules for a logic of generalized relations

based just on the first five rules concerning the existence and local composition of poly-2-cells. The "bijective" rules may then be seen as additional representability requirements that imply the axioms for the two global compositions and the linear distributivities.

1.1. The definition of poly-bicategories. A poly-bicategory $\mathbf{P}$ consists of the data for a (2-)computad [23, 24], *i.e.*

1. a class $\mathbf{P}_0$ of *0-cells* or *objects* $A, B \ldots$;

2. a directed graph over $\mathbf{P}_0$
$$\mathbf{P}_1 \underset{D_1}{\overset{D_0}{\rightrightarrows}} \mathbf{P}_0$$
with *1-cells* $f, g \ldots x, y \ldots$ as edges. As usual, their *domains* and *codomains* are indicated by single arrows, *i.e.* $A \xrightarrow{x} B$ means $D_0 x = A$ and $D_1 x = B$. This graph freely generates a category $\mathbf{F}_1$ with typed paths $\Gamma, \Delta, \ldots$ as morphisms. The empty endo-path on an object A is denoted by ϵ_A. Given a path Γ of length $|\Gamma|$, we write $(\Gamma)_i$ for its i-th component, $(\Gamma)_{<i}$ for its prefix of length i and $(\Gamma)_{>i}$ for its postfix of length $|\Gamma| - i - 1$, provided $i < |\Gamma|$;

3. a directed graph over $\mathbf{F}_1$
$$\mathbf{P}_2 \underset{\partial_1}{\overset{\partial_0}{\rightrightarrows}} \mathbf{F}_1$$
satisfying $D_0\partial_0 = D_0\partial_1$ and $D_1\partial_0 = D_1\partial_1$. We use double arrows to indicate *domains* and *codomains* of the edges $\alpha, \beta \ldots$, called *poly-2-cells*, *e.g.*, $\Gamma \xRightarrow{\alpha} \Delta$ means $\partial_0\alpha = \Gamma$ and $\partial_1\alpha = \Delta$. Among the edges we distinguish *multi-2-cells* with singleton paths as codomain and *2-cells* with singleton domain and codomain;

together with

1. distinguished "identity 2-cells" $x \xRightarrow{1_x} x$ for each 1-cell x;

2. a partial operation $(\mathbf{P}_2 \times \mathbb{N}) \times (\mathbb{N} \times \mathbf{P}_2) \xrightarrow{\cdot ; \cdot} \mathbf{P}_2$ called *cut* that maps $\langle\langle \alpha, i\rangle, \langle j, \beta\rangle\rangle$ to
$(\partial_0\beta)_{<j}, \partial_0\alpha, (\partial_0\beta)_{>j} \xRightarrow{\langle\alpha,i\rangle;\langle j,\beta\rangle} (\partial_1\alpha)_{<i}, \partial_1\beta, (\partial_1\alpha)_{>i}$, provided that

   - $i < |\partial_1\alpha|$ and $j < |\partial_0\beta|$;
   - $(\partial_1\alpha)_i = (\partial_0\beta)_j$;
   - $(\partial_1\alpha)_{<i} \neq \epsilon$ implies $(\partial_0\beta)_{<j} = \epsilon$ and $(\partial_1\alpha)_{>i} \neq \epsilon$ implies $(\partial_0\beta)_{>j} = \epsilon$.

   To minimize the need for parentheses, we set $\alpha^i := \langle \alpha, i\rangle$ and ${}^j\beta := \langle j, \beta\rangle$.

These data are subject to three axioms:

(ID) cut has *identities*: $(\partial_1\alpha)_i = y$ implies $\alpha^i \,;\, {}^0 1_y = \alpha$ and $(\partial_0\beta)_j = y$ implies $1_y{}^0 \,;\, {}^j\beta = \beta$;

(AS) cut is *associative*: if $\alpha^i \;;^j \beta$ and $\beta^k \;;^l \gamma$ are defined, then $(\alpha^i \;;^j \beta)^{i+k} \;;^l \gamma = \alpha^i \;;^{l+j} (\beta^k \;;^l \gamma)$;

(IC) cut satisfies the *interchange property* (referred to as "commutativity" by Lambek [19]):

1. if $\alpha^i \;;^j \gamma$ and $\beta^k \;;^l \gamma$ are defined and $j < l$, then $\alpha^i \;;^j (\beta^k \;;^l \gamma) = \beta^k \;;^{|\partial_0 \alpha|+l} (\alpha^i \;;^j \gamma)$;

2. if $\alpha^i \;;^j \beta$ and $\alpha^k \;;^l \gamma$ are defined and $i < k$, then $(\alpha^i \;;^j \beta)^{k+|\partial_0 \beta|} \;;^l \gamma = (\alpha^k \;;^l \gamma)^i \;;^j \beta$.

The poly-bicategories $\mathbf{P}^{op}$ and $\mathbf{P}^{co}$ arise by reversing the 1-cells and the poly-2-cells of $\mathbf{P}$, respectively.

1.2. Remark.

1. For any object A of $\mathbf{P}$, the 1-cells from A to A with the appropriate poly-2-cells form a poly-category in the sense of Szabo [26].

2. Restricting any poly-bicategory to the 2-cells gives rise to an ordinary category.

3. A straightforward componentwise construction of the "product" of two structures works for poly-bicategories: 0-cells and 1-cells are just pairs of 0- and 1- cells, and poly-2-cells in the product are pairs of poly-2-cells of the same "arity" m, n (*i.e.* with m inputs and n outputs). There is a "singleton" poly-bicategory $\mathbf{1}$ consisting of one 0-cell, one 1-cell, and one poly-2-cell for every arity m, n. This "product" and "singleton" are in fact product and terminal object in the category **pbcat** defined in (3.3).

The need to keep track of the input and output positions makes the notation for multiple cuts rather unwieldy. Fortunately, as indicated in the introduction, planar circuit diagrams can be used to represent the constituents of poly-bicategories more efficiently. Objects correspond to areas in the plane. They are separated by non-intersecting labeled curve segments without horizontal tangents, called "wires", corresponding to 1-cells from the domain on the left to the codomain on the right. Poly-2-cells are nodes with a certain number of input wires on top and output wires at the bottom. For notational convenience we enlarge these nodes to rectangular boxes carrying their labels inside. The 0-cell labels are usually left off to avoid cluttering the diagrams. Double wires indicate potentially non-empty typed paths in $\mathbf{P}_1$.

As an example of their usefulness in simplifying the presentation, consider how circuit diagrams make the equations simpler to understand, as illustrated by the cut operation. Since the third constraint insures planarity, the rewrite rules for cut can have essentially four "shapes".

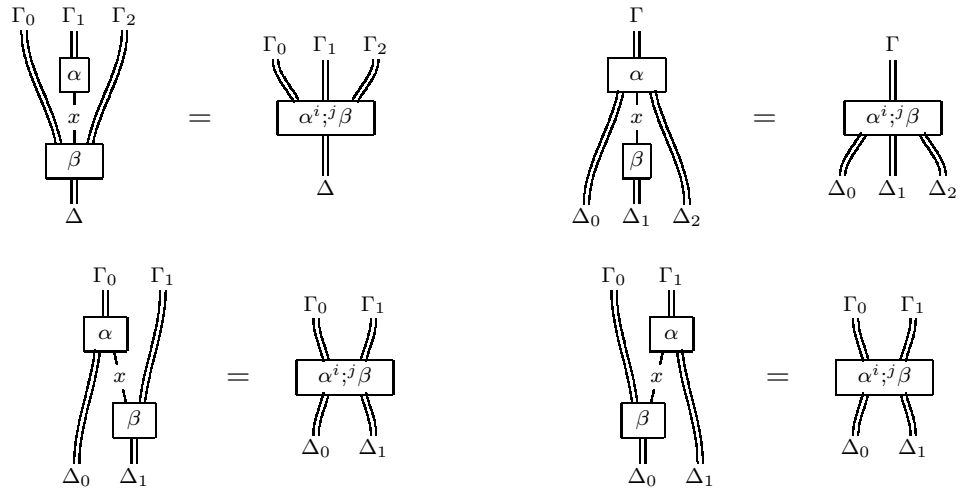

(1)

Note that there is no provision for horizontally juxtaposing such diagrams.

The geometric content of associativity and interchange can likewise be clearly seen from the circuits; for example, associativity deals with circuit shapes like the following.

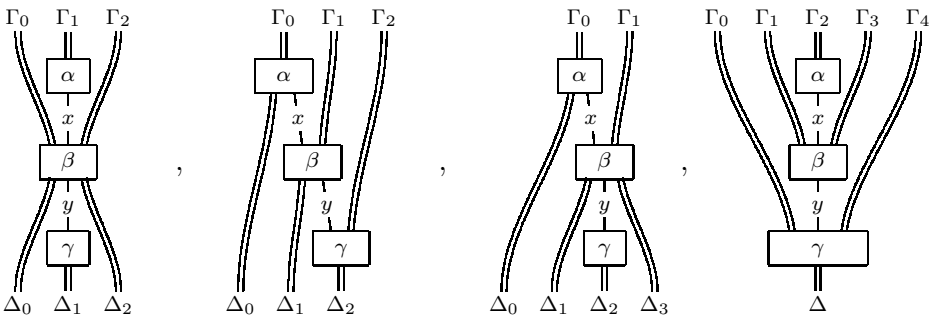

(2)

Similarly, the interchange property refers to the parallel composition of two poly-2-cells with a third one, as illustrated by the following circuits.

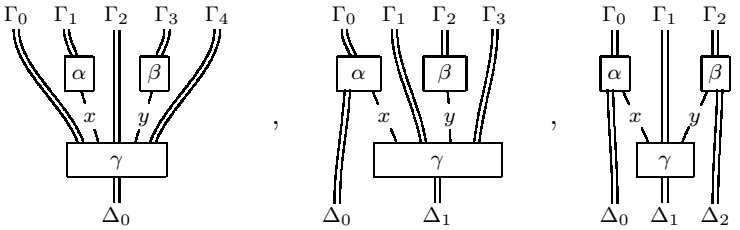

(3)

The first two examples below show two ways in which a category can be used to give a poly-bicategory:

1.3. Examples.

1. If $\mathcal{X}$ is a category, the 0-cells and 1-cells of $\mathbf{P}\mathcal{X}$ are the objects and morphisms, respectively, of $\mathcal{X}$. There exists a poly-2-cell between strings Γ and Δ of composable 1-cells if and only if they have the same composite.

2. If $\mathcal{X}$ is a category, then its "suspension" $\Sigma\mathcal{X}$ has a single (unnamed) 0-cell, its 1- and 2-cells are the objects and morphisms, respectively, of $\mathcal{X}$.

3. Every bicategory and every linear bicategory is a poly-bicategory where all poly-2-cells happen to be 2-cells. Recall that an example of a one object linear bicategory is a linearly distributive category, an example of which is any (not necessarily symmetric) $*$-autonomous category.

   Furthermore to any linear bicategory $\mathbf{B}$ there is a poly-bicategory whose poly-2-cells

   $$x\colon \alpha_1, \alpha_2, \ldots, \alpha_n \implies \beta_1, \beta_1, \ldots, \beta_m$$

   are 2-cells

   $$\alpha_1 \otimes \alpha_2 \otimes \cdots \otimes \alpha_n \implies \beta_1 \oplus \beta_2 \oplus \cdots \oplus \beta_m$$

   in $\mathbf{B}$. This poly-bicategory is essentially equivalent to $\mathbf{B}$, which will be made more precise with the notion of "representability" in the next section.

4. Any set $\mathbf{C}$ of formal poly-2-cells (*i.e.* a computad) gives rise to a free poly-bicategory $\mathcal{F}_{\text{poly}}\mathcal{C}$ by considering all formal composites. In fact, this is the category of circuits satisfying the non-commutative net condition (*cf.* below).

1.4. Multi-bicategories. Throughout this paper the reader should keep a parallel development in mind, *viz.* the notion of a *multi-bicategory*. The definition of a multi-bicategory is similar to that for poly-bicategories: the 2-dimensional structure has to be given by multi-2-cells only, and so the second interchange property must be dropped. Any poly-bicategory $\mathbf{P}$ induces a multi-bicategory $m\mathbf{P}$ by forgetting all poly-2-cells which are not multi-2-cells or 2-cells. However, we do not wish to regard multi-bicategories just as specializations of poly-bicategories, since as far as morphisms are concerned, we will be interested in different ones in the two cases, *cf.* Section 3. The techniques and concepts are similar for the multi and poly cases, but generally one cannot derive results for one by a naive specialization, but ought to examine the full development more carefully. We have found the study of the poly case (which was necessary for a proper understanding of the "linear" case begun in [6]) to be helpful in understanding how the multi case ought to go, but we expect readers more familiar with ordinary bicategories will find the results on multi-bicategories of more immediate interest. Each section of the paper will include remarks pointing out the multi-bicategory development so that theme will be simple to follow.

Note that among the types of cut illustrated in equation 1 above, only the first can appear in a multi-bicategory.

1.5. Examples. Multi-bicategories

1. First, we note that to any bicategory $\mathbf{B}$ there is a multi-bicategory whose multi-2-cells $x\colon \alpha_1, \alpha_2, \ldots, \alpha_n \Longrightarrow \beta$ are 2-cells $\alpha_1 \otimes \alpha_2 \otimes \cdots \otimes \alpha_n \Longrightarrow \beta$ in $\mathbf{B}$. This multi-bicategory is representable, and is equivalent to $\mathbf{B}$. In this sense, multi-bicategories are the "right" (conservative) generalization of bicategories, poly-bicategories being the right generalization of linear bicategories.

2. Of course, "modules" and "multilinear functions" provide one of the prime examples for multi-bicategories. The roots of such examples go back at least to Bourbaki [4]. More specifically: rings with unit may be viewed as the objects of a multi-bicategory with left-$\mathbf{R}$-right-$\mathbf{S}$-bi-modules (or *modules* for short) as 1-cells from $\mathbf{R}$ to $\mathbf{S}$. Such a module $\mathcal{M}$ comes equipped with a left-action $\mathbf{R} \otimes \mathcal{M} \stackrel{\mu_*}{\Longrightarrow} \mathcal{M}$ and a right-action $\mathcal{M} \otimes \mathbf{S} \stackrel{\mu^*}{\Longrightarrow} \mathcal{M}$, subject to the familiar axioms. Here $\otimes$ denotes the tensor product of the underlying Abelian groups. Multi-2-cells from $\langle \mathcal{M}_i\colon i < m\rangle$ to $\mathcal{N}$ are given by *multi-linear functions* from $\mathcal{M}_0, \mathcal{M}_1, \cdots, \mathcal{M}_{m-1}$ to $\mathcal{N}$. This is a well-known and simple notion, which only becomes complicated when one tries to represent such functions by the tensor: then one characterizes them as homomorphisms of Abelian groups equalizing the m homomorphisms from $\mathcal{M}_0 \otimes \mathbf{R}_0 \otimes \mathcal{M}_1 \otimes \cdots \otimes \mathbf{R}_{m-2} \otimes \mathcal{M}_{m-1}$ to $\mathcal{M}_0 \otimes \mathcal{M}_1 \otimes \cdots \otimes \mathcal{M}_{m-1}$ induced by the left and right actions, as well as module homomorphisms with respect to the left action of $\mathcal{M}_0$ and the right action of $\mathcal{M}_{m-1}$, *cf.* [13]. Note then that the multi-bicategory structure is more natural than the bicategory structure with the tensor; in the present context, the latter amounts to the representability of the multi-bicategory (Section 2). Separating these notions (multi-linear functions and tensors, or more generally, multi-2-cells and representability) allows one to consider contexts where multi-linear functions occur, but (*e.g.* because of insufficient cocompleteness) cannot be represented by a tensor.

   Since rings with unit are just monads in $\mathbf{ab}$, the monoidal category of abelian groups, and since monoidal categories are just one-object bicategories, this example admits a generalization to monads in any bicategory $\mathbf{B}$ and modules between such. In fact, this can be generalized still further by replacing monads by unstructured endo-1-cells of $\mathbf{B}$. The notion of module still makes sense in this context. The lack of identity modules in this construction motivated the introduction of interpolads in [15].

   Another direction of generalization opens up when monads are replaced by arbitrary lax functors $\mathbf{A} \longrightarrow \mathbf{B}$ (Section 4).

1.6. Closedness and linear adjoints. Various notions known from 2-categories or bicategories can already be formulated in the context of poly-bicategories; most of these are direct translations from the linear bicategory setting [6].

A 1-cell $B \xrightarrow{x} C$ together with a poly-2-cell $\Gamma, x \xRightarrow{\alpha} \Delta$ is called a *right extension* or *right hom* of Δ along Γ, if cutting α with multi-2-cells at x induces bijections

$$\frac{\Gamma, \Theta \Longrightarrow \Delta}{\Theta \Longrightarrow x}$$

A right extension $\langle x, \alpha \rangle$ is called *absolute*, if cutting α with poly-2-cells at x induces bijections

$$\frac{\Gamma, \Theta \Longrightarrow \Delta, \Omega}{\Theta \Longrightarrow x, \Omega}$$

Right extensions in $\mathbf{P}^{op}$, $\mathbf{P}^{co}$ and $\mathbf{P}^{coop}$ are called *right lifting, left extension* and *left lifting* in $\mathbf{P}$, respectively, or *left hom, right cohom* and *left cohom*. We call $\mathbf{P}$ *closed*, if absolute right extensions and absolute right liftings exist for all typed paths with common domain, or codomain, respectively. If confusion with the notion of "closed" for bicategories is likely (see Remark 1.9), we shall say "poly closed" to emphasize the poly notion.

Since right extensions are unique up to isomorphic 2-cells, we usually denote them by $\langle \Gamma \multimap \Delta, \mathrm{ev} \rangle$.

$A \xrightarrow{f} B$ is *left linear adjoint* to $B \xrightarrow{g} A$, $f \dashv\!\!| \, g$, if poly-2-cells $\epsilon_A \xRightarrow{\tau} f, g$, the *unit*, and $g, f \xRightarrow{\gamma} \epsilon_B$, the *counit*, exist such that

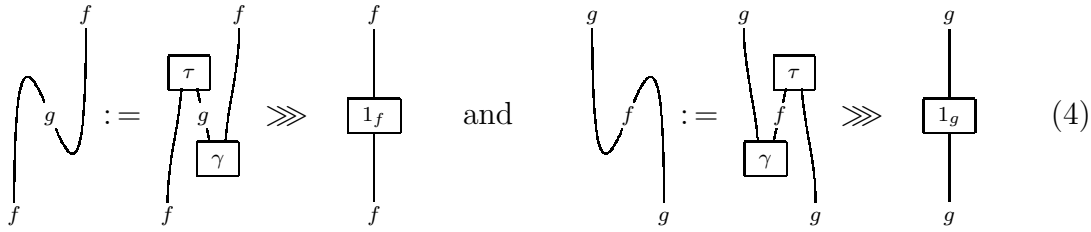

(4)

To avoid excessive cluttering, we have left off the unit and counit boxes. We write $f \Vdash\!\!\dashv\!\!| \, g$ to indicate that f and g are mutually, or *cyclic*, linear adjoint, *i.e.* $f \dashv\!\!| \, g$ and $g \dashv\!\!| \, f$.

Since linear adjoints are determined up to isomorphic 2-cell, specific calculations require a choice. Usually we denote a chosen left (right) linear adjoint of f by ${}^*f$ (f^*). If every 1-cell in $\mathbf{P}$ has both a left and a right linear adjoint, we say that $\mathbf{P}$ *has all linear adjoints*.

The characterization by Street and Walters [25] of adjunctions by means of absolute right extensions or absolute right liftings carries over to the poly-setting for linear adjoints as well.

1.7. Proposition. *A poly-2-cell $g, f \xrightarrow{\gamma} \epsilon_B$ is the unit of a adjunction $f \dashv\!\!| \, g$ if and only if $\langle f, \gamma \rangle$ is an absolute right extension of ϵ_B along g. So $\mathbf{P}$ has all linear adjoints if and only if it is (poly) closed.*

A calculus of "Australian mates" [14] is available as well. If Γ_1 and Δ_0 consist of left adjoint 1-cells, then by a *right mate* for a poly-2-cell $\Gamma_0, \Gamma_1 \stackrel{\alpha}{\Longrightarrow} \Delta_0, \Delta_1$ we mean a poly-2-cell $\Delta_0^*, \Gamma_0 \stackrel{\beta}{\Longrightarrow} \Delta_1, \Gamma_1^*$ such that the sequential composition with the units of $\Delta_0 \dashv\!\shortmid \Delta_0^*$ and the counits of $\Gamma_0 \dashv\!\shortmid \Gamma_0^*$ yields α, *i.e.*

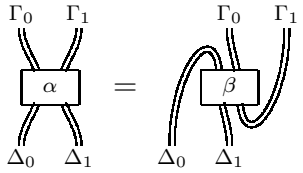

(5)

Here $(\epsilon_A)^* := \epsilon_A$ and $(x, \Gamma)^* := \Gamma^*, x^*$ for some choice of right adjoints.

If Γ and Δ consist of cyclic adjoint 1-cells, a poly-2-cell $\Gamma \stackrel{\alpha}{\Longrightarrow} \Delta$ is called *cyclic*, if its left mate and its right mate from ${}^*\Delta = \Delta^*$ to ${}^*\Gamma = \Gamma^*$ agree. We call $\mathbf{P}$ *cyclic*, if all 1-cells are cyclic adjoints and all poly-2-cells are cyclic.

Clearly, the right mate β above is obtained by sequentially composing α with the counits of $\Delta_0 \dashv\!\shortmid \Delta_0^*$ and with the units of $\Gamma_0 \dashv\!\shortmid \Gamma_0^*$.

1.8. Examples.

1. If $\mathcal{X}$ is a groupoid, then $\mathbf{P}\mathcal{X}$ has all linear adjoints. However, $\mathcal{F}_{\text{poly}}\mathbf{C}$ does not have all linear adjoints, nor does the following example $\mathcal{H}_n$.

   For each $n \geq 0$, the poly-bicategory $\mathcal{H}_n$ has one 0-cell $*$. Its 1-cells are given by the oriented hyperplanes of $\mathbb{R}^n$. These can be parametrized by elements $(\mathbf{n}, d)$ of $S^{n-1} \times \mathbb{R}$, where $S^{n-1} \subseteq \mathbb{R}^n$ is the unit sphere. The hyperplane then consists of the vectors $\mathbf{x}$ satisfying $\mathbf{x} \cdot \mathbf{n} = d$, the origin's distance from the hyperplane being $-|d|$. There is a poly-2-cell from a sequence $\langle (\mathbf{n}_i, d_i) \colon i > p \rangle$ to a sequence $\langle (\mathbf{n}'_j, d'_j) \colon j < q \rangle$ if and only if the set of all vectors $x \in \mathbb{R}^n$ satisfying

   $$\mathbf{x} \cdot \mathbf{n}_i < d_i \quad \text{for} \quad i < p \qquad \text{and} \qquad \mathbf{x} \cdot \mathbf{n}'_j \geq d'_j \quad \text{for} \quad j < q$$

   is empty. Geometrically this means that the intersection of the regions "below" the input hyper-planes does not meet the intersection of the regions "above" the output hyper-planes. The cut operation works, since the regions in question (intersections and unions of half spaces of the form $\mathbf{x} \cdot \mathbf{n} < d$) form a distributive lattice.

2. The Chu-construction [5] initially applied to symmetric monoidal closed categories with pullbacks. Later it was generalized to closed (w.r.t. 1-cell composition) bicategories with local pullbacks, *cf.* [17] and [16]. Doing away with these extra hypotheses, it can still be viewed quite naturally as a construction of a poly-bicategory from a multi-bicategory, without worrying about issues of representability. The resulting poly-bicategory is cyclic, a fact which we shall use to simplify the presentation.

Given a multi-bicategory $\mathbf{M}$, the objects of $\mathbf{Chu}(\mathbf{M})$ are endo-1-cells of $\mathbf{M}$. The new 1-cells from $A \xrightarrow{a} A$ to $B \xrightarrow{b} B$ are so-called "Chu-cells" $\mathsf{F} = \langle f_0, \varphi_0, f_1, \varphi_1 \rangle$ given by two independent multi-2-cells

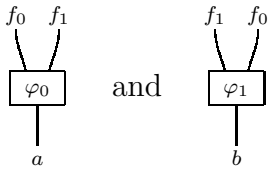

(6)

It might be simpler to view F as the following diagram, which makes sense if $\mathbf{M}$ is a bicategory.

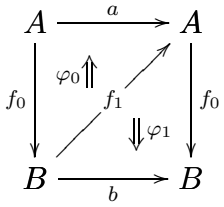

There is a "negation" operator which interchanges the roles of f_0 and f_1: for example

$\mathsf{F}^\perp =$

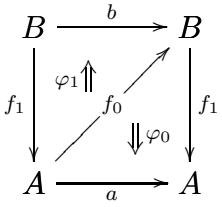

$\mathsf{F}^\perp$ is in fact a cyclic adjoint to F. If $\mathbf{M}$ has "identity 1-cells" $\top_A$ for 0-cells A (technically, this is the requirement that it be representable for tensor units, in the sense of Section 2; certainly this is the case if $\mathbf{M}$ is a bicategory), then there are "unit" Chu-cells (which in fact represent the tensor and par units in $\mathbf{Chu}(\mathbf{M})$)

$\perp_a =$

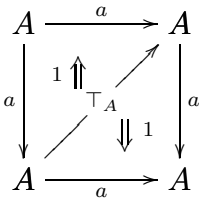

$\top_a =$

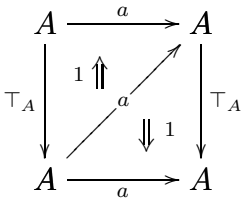

We define a "Chu-band" as a poly-2-cell $\mathsf{F}^{(0)}, \ldots, \mathsf{F}^{(n-1)} \Longrightarrow \epsilon$ from a sequence of Chu-cells

$$\mathsf{F}^{(i)} = \langle f_0^{(i)}, \varphi_0^{(i)}, f_1^{(i)}, \varphi_1^{(i)} \rangle \colon (A_i \xrightarrow{a_i} A'_i) \longrightarrow (A_{i+1} \xrightarrow{a_{i+1}} A'_{i+1})$$

(for $i < n$), to the empty sequence, given by n multi-2-cells ρ_i in $\mathbf{M}$

$$\begin{array}{lcl} f_0^{(0)}, f_0^{(1)}, \ldots, f_0^{(n-2)} & \xRightarrow{\rho_{n-1}} & f_1^{(n-1)} \\ f_0^{(1)}, f_0^{(2)}, \ldots, f_0^{(n-1)} & \xRightarrow{\rho_0} & f_1^{(0)} \\ \vdots & & \\ f_0^{(n-1)}, f_0^{(0)}, \ldots, f_0^{(n-3)} & \xRightarrow{\rho_{n-2}} & f_1^{(n-2)} \end{array}$$

Note that $A_n = A_0$ and $a_n = a_0$ is forced by the typing. These multi-2-cells have to satisfy these n equations:

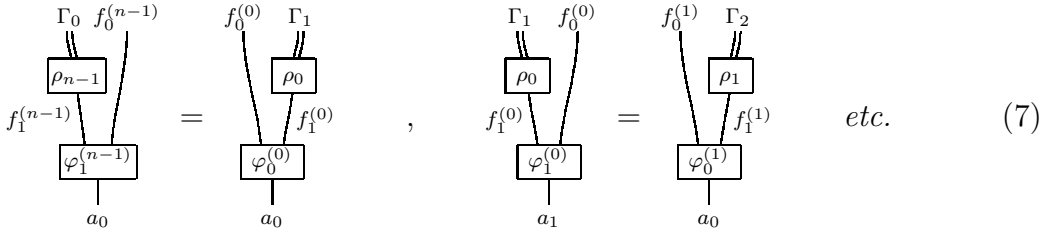

$$etc. \qquad (7)$$

where Γ_i is the $n-1$ string of f_0's starting at $f_0^{(i)}$ and proceeding cyclically.
A poly-2-cell $\mathsf{F}^{(0)}, \ldots, \mathsf{F}^{(n-1)} \Longrightarrow \mathsf{K}^{(0)}, \ldots, \mathsf{K}^{(m-1)}$ in $\mathbf{Chu}(\mathbf{P})$ is just a Chu-band

$$\mathsf{F}^{(0)}, \ldots, \mathsf{F}^{(n-1)}, \mathsf{K}^{(m-1)^\perp}, \ldots, \mathsf{K}^{(0)^\perp} \Longrightarrow \epsilon$$

It is now a straightforward exercise to show that $\mathbf{Chu}(\mathbf{M})$ is a cyclic poly-bicategory. (The cyclicity is "built-in" by having the cyclic set of multi-2-cells ρ in the definition of a Chu-band.)

Remark: What if we use all 1-cells of $\mathbf{M}$, and not just the endo-1-cells? The construction above can be carried through, but loses its essential character, since the result is only a multi-bicategory, and is no longer cyclic. The new 1-cells from $A \xrightarrow{a} A'$ to $B \xrightarrow{b} B'$ are $\mathsf{F} = \langle f_0, \varphi_0, f_1, \varphi_1, f_2 \rangle$ where f_2 replaces the second occurrence of f_0 in the poly version; if $\mathbf{M}$ is a bicategory, this could be given diagrammatically as follows.

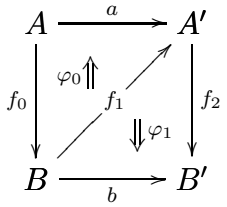

A multi-2-cell $\mathsf{F}^{(0)}, \ldots, \mathsf{F}^{(n-1)} \Longrightarrow \mathsf{K}$ from a non-empty sequence of 1-cells consists of $n+2$ multi-2-cells ρ_j in $\mathbf{M}$ with domains the connected n-element substrings Γ_i of the $(2n+1)$-element string

$$f_0^{(0)}, f_0^{(1)}, \ldots, f_0^{(n-1)}, k_1, f_2^{(0)}, f_2^{(1)}, \ldots, f_2^{(n-1)}$$

counted from the left. The 1-cells k_0, $f_1^{(0)}$, …, $f_1^{(n-1)}$, k_2 serve as codomains. These multi-2-cells have to satisfy $n+1$ equations of the same "shape" as for the poly case. A new multi-2-cell into K with empty domain only makes sense if K is an endo-Chu-cell on $A \xrightarrow{a} A$. Then such a multi-2-cell consists of multi-2-cells $\epsilon_A \xRightarrow{\rho_0} k_0$ and $\epsilon_A \xRightarrow{\rho_2} k_2$ together with a 2-cell $k_1 \xRightarrow{\rho_1} a$ subject to the evident equation.

1.9. Remark. Linear adjoints are not the same as ordinary adjoints. For example, linear adjoints can be defined in a poly-bicategory, but ordinary adjoints require representability (Section 2): they can only be defined in a representable multi-bicategory. There are other significant differences as well. Consider for example that sets, relations and inclusions may be viewed as a bicategory in two ways, differing in the global composition: for $R \subseteq A \times B$ and $S \subseteq B \times C$ we can define

$$R \otimes S = \{\, \langle x, z\rangle \mid \exists y. \langle x, y\rangle \in R \wedge \langle y, z\rangle \in S \,\}$$

$$R \oplus S = \{\, \langle x, z\rangle \mid \forall y. \langle x, y\rangle \in R \vee \langle y, z\rangle \in S \,\}$$

This means that we can consider this either as a linear bicategory [6] by combining both bicategory-structures into a whole, or as a "degenerate" linear bicategory in one of two ways, where both global compositions are given by $\otimes$, or by $\oplus$. As a bicategory with global composition $\otimes$, **rel** is closed in the sense that right liftings and right extensions exist in the sense of Street and Walters [25] (these were called left and right homs in [6]), but it is not poly closed. Only functions have right adjoints (are "maps"). As a bicategory with global composition $\oplus$, **rel** is coclosed, but not poly coclosed. Finally, as a linear bicategory with the global compositions $\otimes$ and $\oplus$, **rel** has all linear adjoints: every relation R is a cyclic linear adjoint with $\neg R^\circ$ as two sided linear adjoint. In particular, now **rel** is poly closed and cyclic.

1.10. Poly-monads. The concept of a *monad* $\mathsf{T} = \langle x, \mu, \eta\rangle$ on an object can be formulated in a multi-bicategory: T consists of an endo-1-cell $A \xrightarrow{x} A$, the *carrier*, together with multi-2-cells $x, x \xRightarrow{\mu} x$, the *multiplication*, and $\epsilon_A \xRightarrow{\eta} x$, the *unit*, subject to the obvious axioms. In the poly-setting however, we need a more symmetric "linear" notion that combines a monad and a comonad on the same object. As was shown in [6], we can think of a poly-monad (a "linear monad" in the representable setting of Section 2) in at least two ways. Concretely, a poly-monad consists of endo-1-cells $f^\otimes$, $f^\oplus$, on some object A which have the structure of a monad and a comonad, respectively, together with actions and coactions

$$f^\oplus, f^\otimes \xRightarrow{\nu_L^\oplus} f^\oplus \xLeftarrow{\nu_R^\oplus} f^\otimes, f^\oplus \qquad f^\otimes, f^\oplus \xLeftarrow{\nu_L^\otimes} f^\otimes \xRightarrow{\nu_R^\otimes} f^\oplus, f^\otimes \tag{8}$$

subject to the obvious requirements, which (in the representable context) are explicitly given in [6]. Conceptually, these requirements follow from the other view of a poly-monad, which is as a poly-functor (Section 3) whose domain is the "singleton" poly-bicategory **1**.

A simple example of a poly-bicategory with a poly-monad is given by $\mathcal{S}\mathbf{1}$ (*cf.* subsection 3.3): there is one 0-cell $*$, two 1-cells $\top, \bot$, and infinitely many poly-2-cells consisting of all strings $x_1, \ldots, x_n \Longrightarrow y_1, \ldots, y_m$ where either all x's and at most one y are $\top$, or all y's and at most one x are $\bot$. The monad is given by $\top, \top \Longrightarrow \top \Longleftarrow \epsilon$, the comonad by $\bot, \bot \Longleftarrow \bot \Longrightarrow \epsilon$. The actions are given by $\bot, \top \Longrightarrow \top \Longleftarrow \top, \bot$ and by $\top, \bot \Longleftarrow \bot \Longrightarrow \bot, \top$. This poly-monad is "generic"; *i.e.* $\mathcal{S}\mathbf{1}$ is initial among all nullary representable (*cf.* Section 2) poly-bicategories with respect to morphisms (*cf.* 3.3).

In the presence of de Morgan duality (*e.g.* if $\mathbf{P}$ is a $*$-linear bicategory), the comonad structure on $f^{\oplus} = f^{\otimes *}$ is determined as the mate of the structure on the monad $f^{\otimes}$, and *vice versa*, and the actions and coactions are derivable. So the notion of a poly-monad incorporates the duality in the poly setting that is inherent in the de Morgan setting.

For example, a monad in **rel** is a preorder relation on the set. Its de Morgan dual is an anti-reflexive, anti-transitive relation: *i.e.* $\langle x, x\rangle$ is never in $\neg R^{\circ}$ and $\langle x, y\rangle$ in $\neg R^{\circ}$ only if for all z either $\langle x, z\rangle$ or $\langle z, y\rangle$ is in $\neg R^{\circ}$. Such a relation under the par provides a comonad (the par unit is the largest anti-reflexive relation). Notice there is an action $(\neg R^{\circ}) \otimes R \leq (\neg R^{\circ})$ as $\langle x, y\rangle \in \neg R^{\circ}$ and $\langle y, z\rangle \in R$ cannot have $\langle z, x\rangle \in R$ otherwise (using the transitivity of R) $\langle y, x\rangle$ would be in R which by assumption it is not.

2. Representability

We now turn to the question to what extent the 2-cells of a poly-bicategory already determine the whole structure. The idea is to bundle all inputs and all outputs of a poly-2-cell α into single 1-cells, respectively, arriving at a 2-cell that "represents" α. Abstracting away from individual poly-2-cells, there should be two bundling operations for typed paths, one for inputs and one for outputs. These may then be viewed as two global compositions of 1-cells and 2-cells.

The idea of clarifying coherence requirements by employing universal properties to define global compositions has been proposed by Hermida, *cf.* Section 8 of [13]. Although intended as a tool for attacking the problem of defining weak n-categories, where even the formulation of the correct coherence requirements had stalled progress beyond $n = 3$, its benefits are already available in the 2-dimensional setting.

2.1. Representability in poly-bicategories. A multi-2-cell $\Gamma \overset{\pi}{\Longrightarrow} x$ is said to *represent* the typed path Γ *as input*, if cutting with π at x induces bijections as follows.

$$\frac{\Gamma_0, \Gamma, \Gamma_1 \Longrightarrow \Delta}{\Gamma_0, x, \Gamma_1 \Longrightarrow \Delta} \tag{9}$$

Note that such bijections are natural in Γ_0, Γ_1 and Δ in the sense that the bijections commute with all cutting operations on any of the 1-cells in these paths. Conversely, such a natural family of bijections induces a multi-2-cell $\Gamma \overset{\pi}{\Longrightarrow} x$ which represents Γ.

Dually, a comulti-2-cell $y \overset{\sigma}{\Longrightarrow} \Gamma$ *represents* Γ *as output*, if cutting with σ at y induces an analogous bijection.

A poly-bicategory is called *representable*, if each typed path is representable as input and as output. It is called *binary representable*, if this holds for all paths of length 2, and *nullary representable* if it holds for all empty paths.

Clearly, representing (co-)multi-2-cells are unique only up to composition with an isomorphism. But singleton paths admit a canonical representation by means of their identity 2-cells. Due to the naturality requirement, it is clear that representability for typed paths of lengths 0 and 2 implies representability of all paths.

The relationship between representable poly-bicategories and linear bicategories resembles that between fibrations and pseudo-functors into **Cat**. The first notion together with a choice of "structural data" induces the second notion. However, as soon as we make such a choice, there will be implied coherence conditions.

A chosen representing multi-2-cell for a typed path x, y will be denoted by $x, y \overset{\otimes}{\Longrightarrow} x \otimes y$ and its codomain will be called "the tensor" of x and y. For an object B, a chosen representing multi-2-cell for ϵ_B will be written as $\epsilon_B \overset{\top}{\Longrightarrow} \top_B$ and its codomain will be called "the tensor unit" of B. The dual notions are $x \oplus y \overset{\oplus}{\Longrightarrow} x, y$ and $\bot_B \overset{\bot}{\Longrightarrow} \epsilon_B$ with "the par" of x and y, respectively "the par unit" of B, as domain.

By abuse of terminology, we say that $\mathbf{P}$ *has tensors* or *has tensor units*, respectively, *has pars* or *has par units*, if the corresponding representing (co-)multi-2-cells exist and some choice has been made. The ability to make such a choice of course presupposes a sufficiently strong choice principle.

The corresponding nodes in a circuit diagram will be called *tensor (par) links* and *unit links*. In logical terminology, these correspond to introduction rules for $\otimes$ and $\top$, and to elimination rules for $\oplus$ and $\bot$:

(10)

2.2. Theorem. *If* $\mathbf{P}$ *is a poly-bicategory that has tensors, pars and their units, then its objects, 1-cells and 2-cells together with the chosen data form a linear bicategory* $\mathbf{B}$ *in the sense of [6].*

Proof. In the one-object case, this is in the original paper on linearly distributive categories [7], and the general proof is essentially the same. We just mention that cutting appropriate tensor and par links induces poly-2-cells $f, g \oplus h \Longrightarrow f \otimes g, h$ and $f \oplus g, h \Longrightarrow f, g \otimes h$ whenever $D_1 f = D_0 g$ and $D_1 g = D_0 h$. Under the inverse bijections of (9) and its dual, these yield the "linear distributivities"

$$f \otimes (g \oplus h) \Longrightarrow (f \otimes g) \oplus h \text{ and } (f \oplus g) \otimes h \Longrightarrow f \oplus (g \otimes h)$$

characteristic of linear bicategories. ∎

2.3. Proposition. *For an object B, any representing multi-2-cell $\epsilon_B \xRightarrow{\top} \top_B$ for ϵ_B as input and any representing comulti-2-cell $\bot_B \xRightarrow{\bot} \epsilon_B$ for ϵ_B as output are cyclic mates.*

Proof. There exist uniquely determined 2-cells

$$\top_B, \bot_B \xRightarrow{\gamma} \epsilon_B \xLeftarrow{\gamma'} \bot_B, \top_B \quad \text{and} \quad \top_B, \bot_B \xLeftarrow{\tau} \epsilon_B \xRightarrow{\tau'} \bot_B, \top_B$$

satisfying

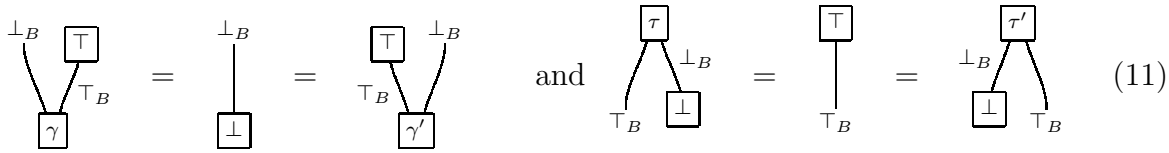

(11)

This immediately establishes τ and γ as the unit and counit of an adjunction $\top_B \dashv\!\!\!\vdash \bot_B$, and similarly τ' and γ' as unit and counit of an adjunction $\bot_B \dashv\!\!\!\vdash \top_B$.

Conversely, if a representing multi-2-cell $\epsilon_B \xRightarrow{\top} \top_B$ for ϵ_B as input is cyclic, *i.e.* $\top_B$ is a cyclic adjoint and both mates of the multi-2-cell agree, then the mate is a representing comulti-2-cell for ϵ_B as output. ∎

Note this makes $\langle \top_B, \bot_B \rangle$ a linear monad.

The "negation links" introduced by Schneck [22] in order to adapt the Rewiring Theorem [2] to the non-commutative setting, represent the units and counits of the adjunctions (11).

Linear adjoints for representable poly-bicategories correspond to linear adjoints for linear bicategories [6]. In that paper we gave an analysis of linear and cyclic adjoints, of various notions of closed structure, including the "right" generalization of $*$-autonomous categories to this setting. For all this, and (anticipating the next section) for a discussion of (linear) monads, we refer the reader to that paper.

In a closed poly-bicategory, representability for tensor is equivalent to representability for par, and each may be given in terms of a simple universal property. To see this we need to construct certain slice categories of a bicategory.

Let $\mathbf{P}$ be a poly-bicategory: then by $\mathbf{P}/\Gamma$ we mean the slice category whose objects are comulti-2-cells $Z \xRightarrow{v} \Gamma$ and whose maps $v \xrightarrow{f} v'$ are 2-cells $Z \xRightarrow{f} Z'$ with $f \,;\, v' = v$. Dually, by $\Gamma/\mathbf{P}$ we mean the coslice category whose objects are multi-2-cells $\Gamma \xRightarrow{v} Z$ and whose maps $v \xrightarrow{f} v'$ are 2-cells $Z \xRightarrow{f} Z'$ with $v \,;\, f = v'$.

2.4. Lemma. *For a closed poly-bicategory $\mathbf{P}$, the following are equivalent.*

1. $\mathbf{P}$ *is tensor and tensor unit representable.*

2. $\mathbf{P}$ *is par and par unit representable.*

3. *the coslice category* $[A, B]/\mathbf{P}$ *has an initial object for all composable 1-cells* A *and* B*, and the coslice category* $\epsilon_X/\mathbf{P}$ *has an initial object for each 0-cell* X*.*

4. *the slice category* $\mathbf{P}/[A, B]$ *has a final object for all composable 1-cells* A *and* B*, and the slice category* $\mathbf{P}/\epsilon_X$ *has a final object for each 0-cell* X*.*

PROOF. The equivalence (1) $\Leftrightarrow$ (2) is an easy consequence of de Morgan duality; the equivalence (2) $\Leftrightarrow$ (4) is dual to the equivalence (1) $\Leftrightarrow$ (3). So we shall sketch that last equivalence only.

Clearly the representing objects for the empty and binary sequents must satisfy these conditions. For the converse of the binary case we have the following equivalences:

$$\dfrac{\dfrac{\dfrac{\dfrac{C_1, .., C_n, A, B, C'_1, .., C'_m \implies Z}{C_2, .., C_n, A, B, C'_1, ..., C'_m \implies C_1 \multimap Z}}{\vdots}}{A, B, C'_1, \ldots, C'_m \implies (C_n \multimap \cdots \multimap Z)}}{\vdots}$$
$$\dfrac{A, B \implies ((C_n \multimap \cdots \multimap Z) \circ\!\!- \cdots \circ\!\!- C'_m)}{A \otimes B \implies ((C_n \multimap \cdots \multimap Z) \circ\!\!- \cdots \circ\!\!- C'_m)}$$

showing that an initial object in the coslice category does give a representing object. The nullary case may be left to the reader.

■

Often poly-bicategories are naturally closed while their representability is a somewhat more artificial property. The well-known example of the tensor for Abelian groups (or any commutative theory) bears witness to this.

2.5. EXAMPLES.

1. **1** is representable (since all the poly-2-cell hom sets are singletons). As a linear bicategory, **1** has just one 0-cell, one 1-cell, and one 2-cell.

2. The (componentwise) "product" of two representable poly-bicategories is representable.

3. $\mathcal{S}\mathbf{1}$ (subsection 1.10) is nullary representable, but not binary representable. For example, there is no object $\top \oplus \top$ representing $\top, \top$ as output. Some strings are always representable, however: for example, $\top, \bot$ is representable as output (*i.e.* $\top \oplus \bot$ exists), and is canonically given by $\top$.

4. In the poly-bicategory **Chu**(**M**) of Example 1.8(2), representing multi-2-cells exist for empty typed paths (as input), provided this is the case in **M**, as we pointed out.

   To guarantee the existence of representing multi-2-cells for typed paths of length 2, the existence of these in **M** does not suffice. One also needs to require the 2-cells of **M** to admit right extensions (or right homs) $\multimap$ and right liftings (or left homs) $\circ\!\!-$ (*i.e.* to be closed in the sense of Street and Walters [25]) as well as local pullbacks. Then for Chu-cells $\mathsf{F} = \langle f_0, \varphi_0, f_1, \varphi_1 \rangle$ from $A \xrightarrow{a} A$ to $B \xrightarrow{b} B$ and $\mathsf{G} = \langle g_0, \gamma_0, g_1, \gamma_1 \rangle$ from b to $C \xrightarrow{c} C$ the central 1-cell of their tensor $\langle f_0 \otimes g_0, \eta_0, e_1, \eta_1 \rangle$ is the pullback of the cospan

$$g_0 \multimap f_1 \xRightarrow{g_0 \multimap \varphi_1^{\circ -}} g_0 \multimap b \circ\!\!- f_0 \xLeftarrow{\gamma_0^{-\circ} \circ\!\!- f_0} g_1 \circ\!\!- f_0$$

   cf. [17] and [16]. (The superscripts indicate exponential transposes.)

2.6. Remark. Representability is a significant property which may well require non-trivial conditions on the structures concerned. In Section 4 we shall study module poly-bicategories, and for them to be representable will require strong hypotheses on the underlying poly-bicategories, even if they are representable themselves. For now, we can present a simpler illustration of a construction which may destroy representability. Furthermore, this construction attempts to capture the essence of dinaturality, but to explore that further would take us beyond the scope of this paper.

For a poly-bicategory **P** we construct a new poly-bicategory **twist**(**P**) with the same objects as **P**. Each 2-cell $x \xRightarrow{\alpha} y$ of **P** induces two 1-cells $+\alpha$ and $-\alpha$ in **twist**(**P**), with domain $D_0 x = D_0 y$ and codomain $D_1 x = D_1 y$.

Now a poly-2-cell $\langle \omega_L, \omega_R \rangle$ in **twist**(**P**) between two strings of signed 2-cells consists of two poly-2-cells in **P** subject to the requirement that the parallel composite of ω_L with all positive inputs and all negative outputs agrees with the parallel composite of ω_R with all negative inputs and all positive outputs.

The following example of a poly-2-cell from $+\alpha, -\beta, +\gamma$ to $+\delta, +\eta, -\varphi$ illustrates the typing of ω_L and ω_R.

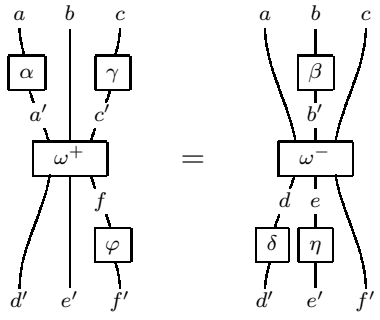

(12)

A cut of $\langle \omega_L, \omega_R \rangle$ and another pair $\langle \psi_L, \psi_R \rangle$ with $-\varphi$ as the first component in its domain is defined by the cuts $(\omega_L)^2 \,;\, {}^0(\psi_L)$ (along f) and $(\omega_R)^2 \,;\, {}^0(\psi_R)$ (along f') in **P**. The 2-cell φ disappears altogether.

2.7. Circuits for representable poly-bicategories. We wish to display the inverse bijections of (9) (from top to bottom) in our circuit diagrams. The elimination rules for $\otimes$ and $\top$ and the introduction rules for $\oplus$ and $\bot$ require new devices, called *switching links* and *thinning links*, respectively. These are *not* poly-2-cells, hence we distinguish them by their round shape:

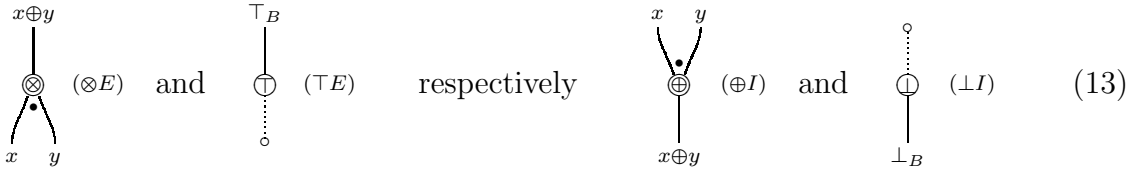

and respectively and (13)

These links must not occur freely in a well-formed circuit diagram but have to be "attached" somewhere. In the binary case, the wires enclosing the dot have to be inputs of some (composite) poly-2-cell such that the resulting region is closed. Conversely, every closed region has to contain precisely one dot. This is the *region criterion* of Schneck [22]. Moreover, a diagram corresponding to a poly-2-cell has to satisfy the *net condition* [2]: for each switching link opening one of the non-tensored wires has to yield a connected acyclic graph.

For the tensor unit $\top_B$, we need to require that both ways of defining the bijections

$$\frac{\top_B, \top_B \Longrightarrow \top_B}{\top_B \Longrightarrow \top_B} \qquad \text{and} \qquad \frac{x, \top_B, y \Longrightarrow x \otimes y}{x, y \Longrightarrow x \otimes y}$$

agree, and dually for $\bot_B$. To indicate, which of the two variants is intended, we connect the loop of the dotted "lasso" in a thinning link with the appropriate neighboring 1-cell wire, resulting in nodes that correspond to elimination rules for $\top$ and to introduction rules for $\bot$.

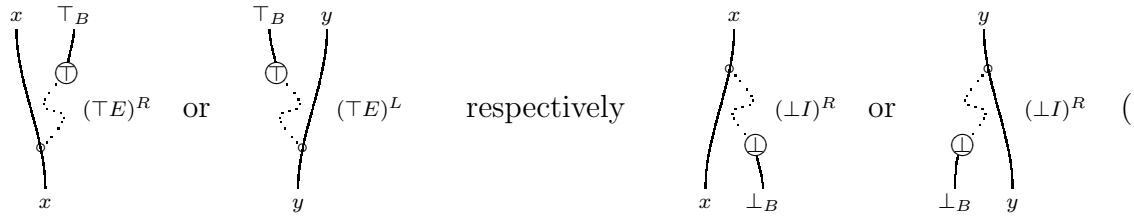

or respectively or (14)

Diagrams with lassos have to remain planar. If there are several possible targets for a lasso, any one of them may be used. This is the essence of the "Rewiring Theorem" of [2] that concerns the possible "moves" of the lasso loop. Even vertical moves across switching links are allowed, but moves between non-tensored wires of a switching link are ruled out.

In particular, we now have the following identities and their duals for $\oplus$ and $\bot$ that can serve as "expansions" when interpreting the calculus of circuit diagrams as a rewrite

system:

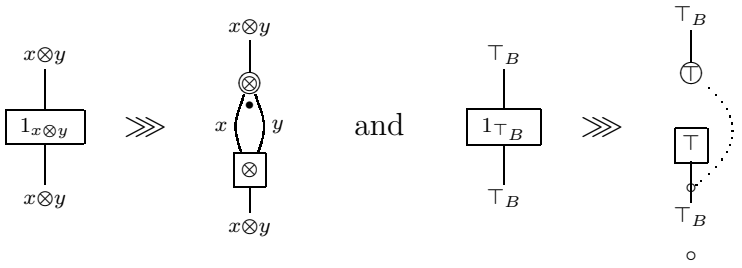

(15)

Similarly, there are local "reductions" of the form

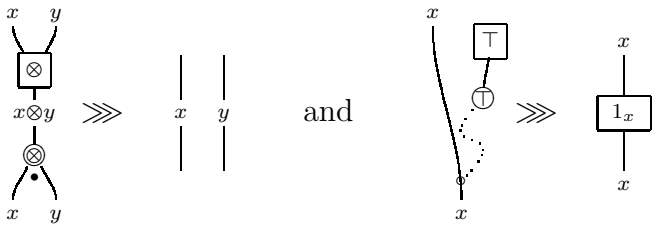

(16)

together with their duals. Notice that the left diagram only makes sense as part of a larger diagram, since the region criterion is not satisfied.

2.8. Representability in multi-bicategories. What does "representability" mean in the context of multi-bicategories? Of course we need only half the representability: in a multi-bicategory only the inputs of the multi-1-cells need to be bundled, resulting in just one global composition. So, a multi-bicategory is called *representable*, if each typed path is representable as input. The development in the multi setting is essentially the same as it was above for the poly setting, so we shall only make a few comments here where there are distinctions the reader ought to be aware of, and end with a few examples.

Although every multi-bicategory is also a poly-bicategory, here the notion of representing non-singleton paths as outputs is not interesting. Hence our slightly overloaded terminology should not lead to misunderstandings. But note that there is a subtlety in our definition, because of the "contextual" presentation. Multi-2-cells representing a path as input correspond to Hermida's [13] "strongly universal" multi-2-cells, rather than to his "universal" multi-2-cells which satisfy a non-contextual version of the requirement above, *i.e.* without parameters Γ_0 and Γ_1.

Theorem 2.2 has an analogue for representable multi-bicategories that have tensors and tensor units: for such a multi-bicategory, its objects, 1-cells and 2-cells together with the chosen representability data form a bicategory $\mathbf{B}$. Likewise Lemma 2.4 has an analogue, which essentially amounts to dropping those clauses which refer to the comulti (par) structure.

Finally, we note that in the multi setting, the notion of adjointness really only makes sense in the representable case.

2.9. Examples. Representability in multi-bicategories.

1. The multi-bicategory of endo-1-cells and modules over a bicategory $\mathbf{B}$ (Example 1.5(2)) usually fails to have representing multi-2-cells for empty paths (as inputs). The minimal amount of structure on an endo-1-cell that would rectify this shortcoming is a "multiplication" $b \otimes b \xRightarrow{\beta} b$ that is a coequalizer of $1_b \otimes \beta$ and $\beta \otimes 1_b$ (and hence in particular associative). This leads to the notion of "interpolad" introduced in [15]. Of course, the relevant modules now have to be compatible with this multiplication. Monads happen to be interpolads with additional structure (units), hence in this case representing multi-2-cells for empty paths also exist. This specializes to the case of (bi-)modules between rings.

   To have representing multi-2-cells for paths of lengths 2 between endo-1-cells, or interpolads, or monads in a bicategory $\mathbf{B}$, we need the existence of local coequalizers and their preservation by the horizontal composition $\otimes$ of $\mathbf{B}$. The latter is certainly guaranteed if $\mathbf{B}$ is closed. In all three cases, the preservation of local coequalizers by $\otimes$ then allows us to build representing multi-2-cells for longer paths by composition, *i.e.* cut.

2. In analogy to the situation for modules over a fixed ring, for so-called "concrete categories" of structured sets, tensor products have been defined by a non-contextual version of the universal property (9), *i.e.* without the parameters Γ_0 and Γ_1, *cf.* [10]. While such tensor products exist, *e.g.*, in any variety, the associativity of the corresponding binary operation is not automatic. Davey and Davis [10] show that associativity holds in so-called "entropic" varieties (where every operation is a homomorphism), but claimed not to know any non-entropic variety where this is the case. However Whitney knew that this tensor product was associative in groups (manifestly non-entropic) [oral communication by Fred Linton]. In other cases this tensor may be non-associative.

3. If $\mathcal{X}$ is a category, $\mathbf{Span}(\mathcal{X})$ is a comulti-bicategory; the usual requirement that $\mathcal{X}$ needs pullbacks is only necessary for representability. Of course, $\mathbf{Span}(\mathcal{X})$ is representable if $\mathcal{X}$ has pullbacks, *via* the usual construction.

3. Poly-functors and morphisms between poly-bicategories

Recall that one motivation for linearly distributive categories was the desire to relate the tensor and par of linear logic in the absence of a negation and hence of de Morgan duality. The same kind of reasoning can lead to the notion of *linear functor* [8]: a lax functor F between $*$-autonomous categories by de Morgan duality has an oplax companion. In the linearly distributive case, this companion cannot be derived but has to be given explicitly.

Similar considerations apply in the 2-dimensional setting. A linear bicategory $\mathbf{B}$ may be viewed as supporting two bicategory structures $\mathbf{B}^{\otimes}$ and $\mathbf{B}^{\oplus}$ on the same classes of objects, 1-cells and 2-cells, subject to certain compatibility requirements. If $\mathbf{B}$ and $\mathbf{B}'$

are the linear bicategories induced by poly-bicategories $\mathbf{P}$ and $\mathbf{P}'$ with tensors, pars and units, then linear functors consist of a lax functor $\mathbf{B}^{\otimes} \xrightarrow{F^{\otimes}} \mathbf{B}'^{\otimes}$ and an oplax functor $\mathbf{B}^{\oplus} \xrightarrow{F^{\oplus}} \mathbf{B}'^{\oplus}$, required to be "mutually relatively strong". This means there have to be natural transformations

$$F^{\oplus}x \otimes F^{\otimes}y \xRightarrow{\nu^{\oplus}_{L}} F^{\oplus}(x \otimes y) \xLeftarrow{\nu^{\oplus}_{R}} F^{\otimes}x \otimes F^{\oplus}y$$
$$F^{\otimes}x \oplus F^{\oplus}y \xLeftarrow{\nu^{\otimes}_{L}} F^{\otimes}(x \oplus y) \xRightarrow{\nu^{\otimes}_{R}} F^{\oplus}x \oplus F^{\otimes}y \tag{17}$$

resembling actions and coactions for 1-cells $A \xrightarrow{x} B$ and $B \xrightarrow{y} C$.

The compatibility requirements turn out to be highly poly-bicategorical in spirit. From this point of view, it is clear that the notion of linear functor is well suited to the poly-bicategorical setting. The key is that $F^{\otimes}$ does not operate on plain poly-2-cells, but rather on poly-2-cells with a chosen output position (like the first factor of a cut). In particular, poly-2-cells with empty output cannot occur as arguments of $F^{\otimes}$. Dually, $F^{\oplus}$ operates on poly-2-cells with chosen input position (like a second factor of a cut).

3.1. Poly-functors. A *poly-functor* $\mathbf{P} \xrightarrow{\mathsf{F}} \mathbf{P}'$ consists of

1. an *object function* $\mathbf{P}_0 \xrightarrow{F} \mathbf{P}'_0$;
2. directed graph morphisms $\mathbf{P}_1 \xrightarrow{F^{\otimes}} \mathbf{P}'_1$ and $\mathbf{P}_1 \xrightarrow{F^{\oplus}} \mathbf{P}'_1$ that agree with F on objects;
3. partial operations $\mathbf{P}_2 \times \mathbb{N} \xrightarrow{F^{\otimes}} \mathbf{P}'_2$ and $\mathbb{N} \times \mathbf{P}_2 \xrightarrow{F^{\oplus}} \mathbf{P}'_2$ defined on those pairs α^i, respectively ${}^j\beta$, with $i < |\partial_1\alpha|$, respectively $j < |\partial_0\beta|$, resulting in poly-2-cells

$$F^{\otimes}\partial_0\alpha \xRightarrow{F^{\otimes}\alpha^i} F^{\oplus}(\partial_1\alpha)_{<i}, F^{\otimes}(\partial_1\alpha)_i, F^{\oplus}(\partial_1\alpha)_{>i}$$
$$F^{\otimes}(\partial_0\beta)_{<j}, F^{\oplus}(\partial_0\beta)_j, F^{\otimes}(\partial_0\beta)_{>j} \xRightarrow{F^{\otimes}{}^j\beta} F^{\oplus}\partial_1\beta$$

of $\mathbf{P}'$. These are presented by so-called *functor boxes*

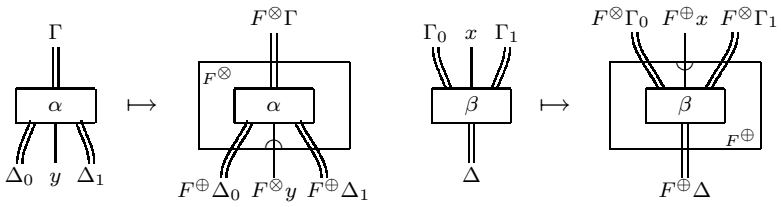

(18)

The image of the selected wire, called the *principal wire*, leaves or enters the functor box at the *principal port*, marked by a little half circle for easy reference. It can always be deduced from the typing information. (The wire labels inside the functor boxes, here left off for space reasons, are the same as in $\mathbf{P}$.)

These data have to satisfy the following axioms

(IF) identity 2-cells are preserved, *i.e.* $F^{\otimes}1_x{}^0 = 1_{F^{\otimes}x}$ and $F^{\oplus 0}1_x = 1_{F^{\oplus}x}$;

(CF) cut is "preserved" in the sense that a cut of two functor boxes can be rewritten as a functor box containing a corresponding cut. This subsumes the notion of $F^{\otimes}$ and $F^{\oplus}$ preserving certain cuts and of being mutually strong, *i.e.* $F^{\otimes}$ acts on $F^{\oplus}$, and $F^{\oplus}$ coacts on $F^{\otimes}$. In other words, functor boxes can be "absorbed" along their principal wires.

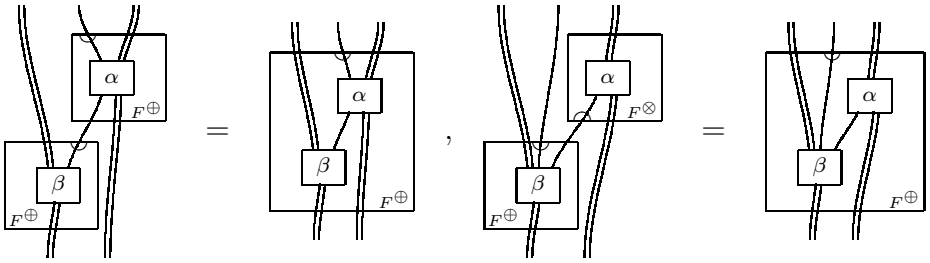

(19)

(plus other symmetric cousins of these rules [8, 6])

If both $\mathbf{P}$ and $\mathbf{P}'$ have tensors and their units, the graph-morphism $F^{\otimes}$ becomes a lax functor with respect to $\otimes$ and $\top$. The structural 2-cells are given by

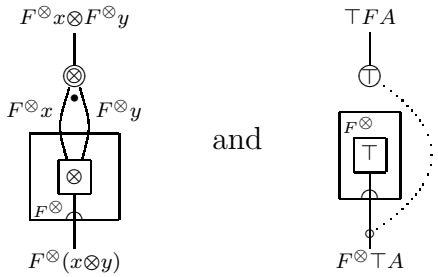

(20)

Dually, $F^{\oplus}$ becomes a colax functor if both $\mathbf{P}$ and $\mathbf{P}'$ have pars and their units. If $\mathbf{P}$ and $\mathbf{P}'$ are representable then F restricts to a linear functor. In particular, $F^{\otimes}$ and $F^{\oplus}$ are mutually strong.

We denote by **pbCat** the large category whose objects are poly-bicategories and whose morphisms are poly-functors. (The latter sections of this paper shall consider what higher dimensional structure might be appropriate in this context.)

3.2. Examples.

1. A poly-functor $\mathbf{1} \longrightarrow \mathbf{P}$ is a poly-monad [6].

2. In a symmetric $*$-autonomous category $\mathbf{V}$ we can define $\oplus$ to be the de Morgan dual of $\otimes$. Hence in the suspension the pair of functors $\circledotimes = \langle \otimes, \oplus \rangle$ is a linear

functor. Furthermore, if the category has the **!** modality, the **?** modality may again derived *via* de Morgan duality. As **!** is monoidal, $⫿ = \langle\, !\,, ?\,\rangle$ naturally forms a linear functor. Similarly, if $\mathbf{V}$ has binary products, the functor $\mathbf{V} \times \mathbf{V} \xrightarrow{\times} \mathbf{V}$ is monoidal and together with its de Morgan dual, the binary coproduct functor, constitutes a linear functor $\langle \times, + \rangle$.

In [8] it was shown that these three linear functors may be defined in a symmetric linearly distributive category, where in general the two components will not be linked by de Morgan duality.

3. For a linear bicategory $\mathbf{B}$, its *local power* $\mathbf{B}^{[2]}$ has the same 0-cells but hom-categories $\mathbf{B}^{[2]}\langle A, B\rangle = \mathbf{B}\langle A, B\rangle \times \mathbf{B}\langle A, B\rangle$. The components of the obvious "diagonal" linear functor $\mathbf{B} \xrightarrow{\Delta} \mathbf{B}^{[2]}$ agree on 0-, 1- and 2-cells. Binary local products and coproducts then are simultaneously provided by a linear functor (pseudo-)adjoint to Δ.

4. The functor parts of a linear functor may be trivial so that the structure is carried by the natural transformations alone. The following example is due to Retoré [21]:

   Let **Coh** be the $*$-autonomous category of coherence spaces, with the usual $\otimes, \oplus$. (So objects are pairs $A = \langle S_A, R_A\rangle$ consisting of a set S_A and a symmetric, anti-reflexive relation R_A.) Define another "lexicographic" tensor structure on **Coh** as follows:

   $$A \circledcirc B = \langle S_A \times S_B, \{\, \langle (a, b), (a', b')\rangle \colon b R_B b' \text{ or } b = b' \wedge a R_A a' \,\}\rangle$$

   Then one may show that the identity functor is a linear functor from **Coh** with the (degenerate or compact) linear structure given by $\circledcirc$ to **Coh** with the linear structure $\langle \otimes, \oplus \rangle$.

5. Given symmetric $*$-autonomous categories $\mathbf{X}$, $\mathbf{Y}$ with coproducts (and therefore products), any lax functor $\mathbf{X} \xrightarrow{F} \mathbf{Y}$ induces a linear functor $\langle F, F^{\perp}\rangle$ (where $F^{\perp}$ is the de Morgan dual of F) [8, Proposition 5], and hence a linear functor between the linear bicategories of matrices of $\mathbf{X}$ and $\mathbf{Y}$, respectively (*cf.* [6, section 1.2]).

3.3. Morphisms of poly-bicategories. Besides this comparatively elaborate notion, a simpler one is available:

A *morphism* $\mathbf{P} \xrightarrow{\mathsf{F}} \mathbf{P}'$ between poly-bicategories assigns objects, 1-cells and poly-2-cells of $\mathbf{P}'$ to those in $\mathbf{P}$ such that identity 2-cells and cuts are preserved. The resulting large category is denoted by **pbcat**.

Note that **pbcat** has componentwise products, equalizers, and a terminal object $\mathbf{1}$, as we pointed out in Remark 1.2 (3); their construction is simple and standard.

A corresponding calculus of morphism boxes differs from that of functor boxes by the absence of principal ports. Hence there are fewer rewrite rules for merging morphism boxes.

The following construction provides a formal way of selecting one of the inputs or outputs of all poly-2-cells, as required by the notion of poly-functor. This enables us to reduce the notion of poly-functor to that of morphism of poly-bicategories.

For a given poly-bicategory $\mathbf{P}$, a new poly-bicategory $\mathcal{S}\mathbf{P}$ with the same objects as $\mathbf{P}$ is specified as follows:

1. each 1-cell f of $\mathbf{P}$ induces two 1-cells $+f$ and $-f$ in $\mathcal{S}\mathbf{P}$ with the same domains and codomains as f has in $\mathbf{P}$;

2. each poly-2-cell $\Gamma \stackrel{\alpha}{\Longrightarrow} \Delta$ of $\mathbf{P}$ induces $|\Gamma|$ poly-2-cells $\langle i, \alpha\rangle$, $i < |\Gamma|$, in $\mathcal{S}\mathbf{P}$ that have the positive copies of α's inputs as inputs, except in position i, where the negative copy of α's input occurs. All outputs are the negative copies of α's outputs. Similarly, there are $|\Delta|$ poly-2-cells $\langle \alpha, j\rangle$, $j < |\Delta|$, with one exceptional positive output in position j.

Notice that a wire along which a cut is performed in $\mathcal{S}\mathbf{P}$ is an exceptional input or output for precisely one of the involved poly-2-cells, hence the resulting poly-2-cell has again one exceptional input or output. We have already seen a special case of this construction as $\mathcal{S}\mathbf{1}$ (subsection 1.10).

3.4. Proposition.

1. *There exists a morphism* $\mathcal{S}\mathbf{P} \xrightarrow{\mathsf{S}_0} \mathbf{P}$ *that preserves objects and forgets the signs of the 1-cells as well as the selected inputs or outputs of the poly-2-cells.*

2. *There exists a morphism* $\mathcal{S}\mathbf{P} \xrightarrow{\mathsf{S}_2} \mathcal{S}\mathcal{S}\mathbf{P}$ *that preserves objects, doubles the signs of the 1-cells and re-selects the exceptional inputs or outputs of the poly-2-cells.*

3. $\langle \mathcal{S}, \mathsf{S}_0, \mathsf{S}_2\rangle$ *constitutes a comonad on* $\mathbf{pbcat}$.

4. *Poly-functors* $\mathbf{P} \longrightarrow \mathbf{P}'$ *between poly-bicategories are in bijective correspondence with morphisms* $\mathcal{S}\mathbf{P} \longrightarrow \mathbf{P}'$, i.e. *with arrows in the coKleisli-category* $\mathbf{pbcat}_{\mathcal{S}}$ *of the comonad* $\mathcal{S}$. *Hence* $\mathbf{pbcat}_{\mathcal{S}} \simeq \mathbf{pbCat}$.

Proof. (1), (2), (4): Immediately clear.

(3): The coassociativitiy follows, since the tripling of signs can be achieved by first doubling them and then doubling either the first of the second copy again. Similarly, first doubling the signs and then forgetting either the first or the second copy results in the identity. ∎

We can also characterize morphisms in terms of poly-functors: morphisms $\mathbf{P} \xrightarrow{\mathsf{G}} \mathbf{P}'$ are in bijective correspondence with poly-functors $\mathbf{P} \xrightarrow{\langle G^{\otimes}, G^{\oplus}\rangle} \mathbf{P}'$ for which the graph morphisms $G^{\otimes}$ and $G^{\oplus}$ agree also on edges and the assignments of poly-2-cells are independent of the selected input or output position.

Since $f \dashv g$ in $\mathbf{P}$ implies $+f \dashv -g$ as well as $-f \dashv +g$, it immediately follows that poly-functors preserve adjunctions.

3.5. Multi-functors and multi-bicategories. There is a notion of "multi-functor" which plays the same role for multi-bicategories as poly-functors play for poly-bicategories, but it is in fact a familiar notion, *viz.* the multi version of the ordinary notion of lax functors (or simply "morphisms") of bicategories. The circuit boxes for such lax functors are described in [8], where they are called "monoidal functor boxes". These have only the principal output port through which the sole output wire of a multi-2-cell leaves the box.

We have already seen (Lemma 2.4) that the existence of adjoints introduces a connection between the "tensor" (input) and "par" (output) parts of the structure of a poly-bicategory. We might thus expect that if the domain poly-bicategory were closed, parts of the definition of a poly-functor might be redundant, as is the case with lax and linear functors between $*$-autonomous categories [8]. This is in fact the case; since the essentials of the proof may be found in [8, 6], we shall state the following without further proof here.

3.6. Proposition. *If* $\mathbf{P}$ *is closed (*cf. *subsection 1.6), the following are equivalent:*

1. *a poly-functor* $\mathbf{P} \xrightarrow{\mathsf{F}} \mathbf{P}'$ *;*
2. *a multi-functor* $m\mathbf{P} \xrightarrow{F} m\mathbf{P}'$*, satisfying* ${}^{\perp}F(A^{\perp}) \cong F^{\perp}({}^{\perp}A)$*, where* $m\mathbf{P}$ *is the multi-bicategory canonically induced by a poly-bicategory* $\mathbf{P}$*.*

4. Poly-modules and their transformations

We now address the question, as to whether the (possibly large) hom-sets of **pbCat** carry additional structure. The calculus of functor boxes motivates a similar approach for introducing higher-dimensional cells.

4.1. Poly-modules. Given poly-functors $\mathbf{P} \xrightarrow{\mathsf{F}} \mathbf{P}'$ and $\mathbf{P} \xrightarrow{\mathsf{G}} \mathbf{P}'$, a *poly-module* $\mathcal{M}$: $\mathsf{F} \Longrightarrow \mathsf{G}$ consists of

- an assignment of 1-cells $FA \xrightarrow{\mathcal{M}x} GB$ in $\mathbf{P}'$ to 1-cells $A \xrightarrow{x} B$ in $\mathbf{P}$;
- a partial operation $\mathbb{N} \times \mathbf{P}_2 \times \mathbb{N} \xrightarrow{\mathcal{M}} \mathbf{P}'_2$ defined on those triples ${}^{j}\beta^{k}$ with $j < |\partial_0\beta|$ and $k < |\partial_1\beta|$, resulting in poly-2-cells

$$F^{\otimes}(\partial_0\beta)_{<j}, \mathcal{M}(\partial_0\beta)_j, G^{\otimes}(\partial_0\beta)_{>j} \xRightarrow{\mathcal{M}({}^{j}\beta^{k})} F^{\oplus}(\partial_1\beta)_{<k}, \mathcal{M}(\partial_1\beta)_k, G^{\oplus}(\beta\partial_1)_{>k}$$

These are represented by so-called *module boxes*

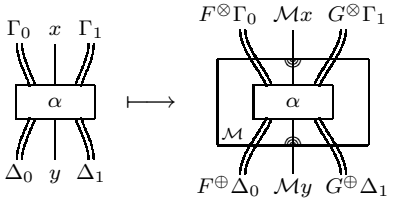

(21)

For easier orientation a shaded half circle marks the two "ports" where the selected inputs and outputs leave the module box.

These data are subject to the following requirements:

(ID) $\mathcal{M}$ preserves identity 2-cells, *i.e.* $\mathcal{M}\langle x, 1_x, x\rangle = 1_{\mathcal{M}x}$;

(MC) cut is "preserved" in the sense that a cut of two module boxes can be rewritten as a module box containing a corresponding cut. This subsumes the notions of left and right actions by F and G, respectively, on $\mathcal{M}$, as well as of left and right coactions. In terms of rewriting this means that functor boxes of F and G can be absorbed by module boxes, and that module boxes can be merged at appropriate ports, *e.g.*

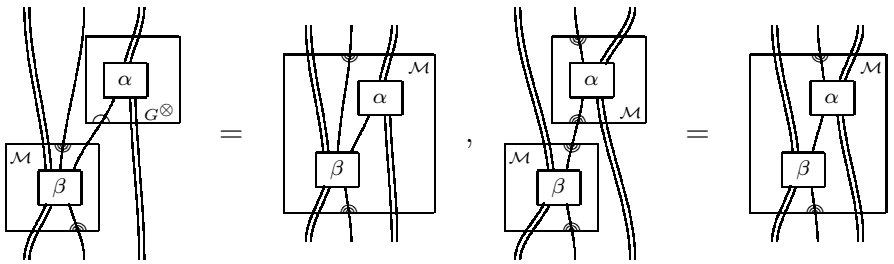

(22)

4.2. Remark. The definition of a poly-module may seem somewhat complicated on first view, but if we assume that the domain poly-bicategory is representable, we can simplify the notion to a more familiar format. Consider applying the module box to a 2-cell $x \overset{\alpha}{\Longrightarrow} y\colon X \longrightarrow Y$: then $\mathcal{M}(\alpha)$ is a 2-cell with the "obvious" typing $\mathcal{M}(x) \Longrightarrow \mathcal{M}(y)\colon F(X) \longrightarrow G(Y)$. If we now take α to be a tensor link $x, y \Longrightarrow x \otimes y$, then depending on which input is selected $\mathcal{M}$ will give us two multi-2-cells, which may be viewed as actions:

$$F^{\otimes}(x), \mathcal{M}(y) \Longrightarrow \mathcal{M}(x \otimes y) \text{ and } \mathcal{M}(x), G^{\otimes}(y) \Longrightarrow \mathcal{M}(x \otimes y)$$

Similarly, *via* the par link there are dual coactions

$$\mathcal{M}(x \oplus y) \Longrightarrow F^{\oplus}(x), \mathcal{M}(y) \text{ and } \mathcal{M}(x \oplus y) \Longrightarrow \mathcal{M}(x), G^{\oplus}(y)$$

Of course, there are various coherence criteria to impose on this data, but it is a straightforward exercise to show that with those, this is sufficient to reconstruct the general module boxes of the definition. For example, given $a, x, b \overset{\alpha}{\Longrightarrow} y$, $\mathcal{M}(\alpha)$ may be constructed *via* this composition:

$$F^{\otimes}(a) \otimes \mathcal{M}(x) \otimes G^{\otimes}(b) \Longrightarrow \mathcal{M}(a \otimes x) \otimes G^{\otimes}(b) \Longrightarrow \mathcal{M}(a \otimes x \otimes b) \Longrightarrow \mathcal{M}(y)$$

The necessary coherence conditions include the appropriate interactions between actions and coactions (these are strengths and costrengths) as well as their interactions with the tensor and par structure, in particular with the linear distributivities. Since these are all

consequences of the general "box absorption" condition given in the definition, we shall not enumerate them all here, but as a sample, we offer the following, which concerns the interaction of action, coaction, and linear distributivity.

$$\begin{array}{ccccc} F^{\otimes}(a) \otimes \mathcal{M}(x \oplus b) & \longrightarrow & F^{\otimes}(a) \otimes (\mathcal{M}(x) \oplus G^{\oplus}(b)) & \longrightarrow & (F^{\otimes}(a) \otimes \mathcal{M}(x)) \oplus G^{\oplus}(b) \\ \downarrow & & & & \downarrow \\ \mathcal{M}(a \otimes (x \oplus b)) & \longrightarrow & \mathcal{M}((a \otimes x) \oplus b) & \longrightarrow & \mathcal{M}(a \otimes x) \oplus G^{\oplus}(b) \end{array}$$

Of course, the general definition has the advantage that it does not depend on representability.

4.3. Remark. Since morphisms are special poly-functors, the notion of poly-module makes perfect sense as an arrow between morphisms of poly-bicategories. The module boxes remain unchanged, while morphism boxes replace the functor boxes, resulting in rewrite rules of the same shape as above.

4.4. Examples.

1. Abelian groups form a monoidal, hence a degenerate linearly distributive category **ab**. Viewed as a 1-object linear bicategory (*via* its suspension), we may consider its linear monads and modules. Linear monads in **ab** are in particular ordinary monads, *i.e.* rings. However, their carrier must have a cyclic linear adjoint, which in this context translates into being finitely generated and projective. So **Mod**(**ab**) is the linear bicategory of (ordinary) modules over finitely generated projective rings. This shows that the extra requirement that monads be linear can in fact introduce a significant additional algebraic requirement.

2. Recall the motivational example (Remark 1.9) of relations on **Set**, in which the two horizontal compositions were taken to be relational composition and its dual. This example can be extended to **idl** = **Mod**(**rel**), the (ordinary) module bicategory of **rel**. Its 0-cells of are monads, *i.e.* sets with a reflexive transitive relation, or *pre-ordered sets*. The 1-cells are relations between the underlying sets which are closed under composition with the preorders at each end. That is, $R\colon \langle X, \leq\rangle \longrightarrow \langle Y, \leq\rangle$ is a 1-cell provided $\langle x, y\rangle \in R$ whenever either $x \leq x'$ and $\langle x', y\rangle \in R$ or $y' \leq y$ and $\langle x, y'\rangle \in R$. These are also known as *order ideals*. The 2-cells are given by inclusions as usual. All the compositions are as in **rel**.

   Now **idl** is an ordinary closed bicategory (by construction in fact). But furthermore it inherits the dual composition. To see this suppose $a \leq a'$ and $\langle a', c\rangle \in R \oplus S$; then we wish to conclude that $\langle a, c\rangle \in R \oplus S$. Pick any b in the intermediate set; we know either $\langle a', b\rangle \in R$ or $\langle b, c\rangle \in S$, but the former implies $\langle a, b\rangle \in R$. The unit for this composition at $\langle A, \leq\rangle$ is actually $\not\geq$. In fact, this is a $*$-linear bicategory with $R \Vdash\!\dashv \neg R^{\circ}$.

4.5. Poly-module transformations. There is no obvious provision for composing poly-modules $\mathsf{F} \xRightarrow{\mathcal{M}} \mathsf{G}$ and $\mathsf{G} \xRightarrow{\mathcal{N}} \mathsf{H}$. We address this problem indirectly by first introducing poly-2-cells between poly-modules. If these admit a cut operation, we can then investigate the question of representability, which should yield two composition operations.

Given two poly-functors F and G from $\mathbf{P}$ to $\mathbf{P}'$ and two (possibly empty) sequences of poly-modules

$$\mathsf{F}_i \xRightarrow{\mathcal{M}_i} \mathsf{F}_{i+1} \quad \text{for} \quad i < p \qquad \text{and} \qquad \mathsf{G}_j \xRightarrow{\mathcal{N}_j} \mathsf{G}_{j+1} \quad \text{for} \quad j < q$$

with $\mathsf{F}_0 = \mathsf{F} = \mathsf{G}_0$ and $\mathsf{F}_p = \mathsf{G} = \mathsf{G}_q$, a poly-module transformation

$$\mathcal{M}_0, \mathcal{M}_1, \ldots, \mathcal{M}_{p-1} \xRightarrow{\Phi} \mathcal{N}_0, \mathcal{N}_1, \ldots, \mathcal{N}_{q-1}$$

assigns to a poly-2-cell in $\mathbf{P}$ with chosen inputs x_i, $i < p$ and chosen outputs y_j, $j < q$, a 2-cell in $\mathbf{P}'$ indicated by the following transformation box:

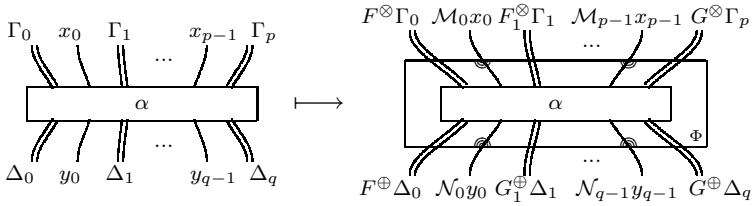

(23)

These transformation boxes can absorb functor images of poly-2-cells and module boxes, and can merge with other transformation boxes when cut in $\mathbf{P}'$ along wires through the appropriate ports. As before, the cuts simply transfer to the 2-cells of $\mathbf{P}$ inside the boxes.

4.6. Remark. As in Remark 4.2 we can simplify this notion if we assume the domain poly-bicategory is representable. Let us consider the simple example of a poly-module transformation $\mathcal{M} \xRightarrow{\Phi} \mathcal{N}$. Given a 2-cell $x \xRightarrow{\alpha} y$, we must have a 2-cell $\mathcal{M}(x) \xRightarrow{\Phi(\alpha)} \mathcal{N}(y)$, and (considering the tensor and par links) we have actions and coactions (strengths and costrengths):

$$F^{\otimes}(x), \mathcal{M}(y) \Longrightarrow \mathcal{N}(x \otimes y) \qquad \mathcal{M}(x), G^{\otimes}(y) \Longrightarrow \mathcal{N}(x \otimes y)$$

$$\mathcal{M}(x \oplus y) \Longrightarrow F^{\oplus}(x), \mathcal{N}(y) \qquad \mathcal{M}(x \oplus y) \Longrightarrow \mathcal{N}(x), G^{\oplus}(y)$$

With the appropriate coherence criteria, this is equivalent to the definition given above. Again, we give the more general definition to allow for non-representable poly-bicategories.

4.7. Example. The following considerations provide two simple, (though somewhat degenerate) examples of poly-modules and transformations. The same data that specify a poly-functor $\mathbf{P} \xrightarrow{\mathsf{F}} \mathbf{P}'$ also specify two endo poly-modules on F, when interpreted on poly-2-cells of $\mathbf{P}$ with a selected input position and a selected output position. Distinguishing one input of $F^{\otimes}$–boxes and one output of $F^{\oplus}$–boxes turns them into boxes for poly-modules that will be called $\mathbb{T}_{\mathsf{F}}$ and $\mathbb{1}_{\mathsf{F}}$, respectively (the suggestive names $\mathbf{F}^{\otimes}$ and $\mathbf{F}^{\oplus}$ are too easily confused with the components of F). But these data may also be interpreted on poly-2-cells with just one selected output or with just one selected input. This means the $F^{\otimes}$–functor boxes give rise to a poly-module transformation from the empty sequence of poly-modules on F to $\mathbb{T}_{\mathsf{F}}$, while the $F^{\oplus}$–functor boxes yield a transformation from $\mathbb{1}_{\mathsf{F}}$ to the empty sequence. We shall see that these provide the nullary representability for the appropriate poly-bicategory of modules.

For morphisms K of poly-bicategories the situation is simpler: they induce one poly-module id_{K} together with transformations from the empty sequence to id_{K} and back.

4.8. Remark. Analogous to Proposition 3.6 we note that if $\mathbf{P}$ is closed, a poly-module on $\mathbf{P}$ is completely determined by a multi-module on $m\mathbf{P}$, the corresponding multi-bicategory, and similarly for poly-module transformations. There is a similar remark for comulti structure.

4.9. Cutting poly-module transformations. Fixing two poly-bicategories $\mathbf{P}$ and $\mathbf{P}'$, we now have the building blocks for a prospective poly-bicategory of poly-functors, poly-modules and their transformations. What is missing is a notion of cut for poly-module transformations along poly-modules. Here a fundamental problem arises when we try to define how, for example, cuts of the form

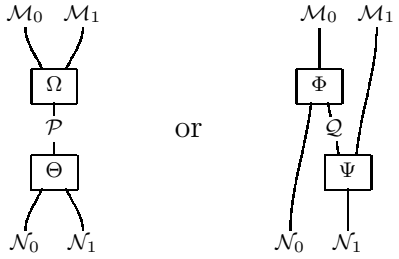

(24)

with $\mathsf{F} \xRightarrow{\mathcal{M}_0} \mathsf{G} \xRightarrow{\mathcal{M}_1} \mathsf{K}, \mathsf{F} \xRightarrow{\mathcal{N}_0} \mathsf{H} \xRightarrow{\mathcal{N}_1} \mathsf{K}, \mathsf{F} \xRightarrow{\mathcal{P}} \mathsf{K}, \mathsf{H} \xRightarrow{\mathcal{Q}} \mathsf{G}$, operate on a poly-2-cell in $\mathbf{P}$ of the form

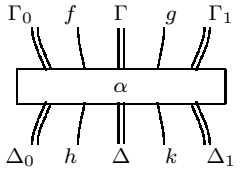

(25)

where f, g, h and k are the selected arguments for $\mathcal{M}_0$, $\mathcal{M}_1$, $\mathcal{N}_0$ and $\mathcal{N}_1$, respectively. For this we need to express α as a cut of two suitable poly-2-cells that Ω and Θ, respectively

Φ and Ψ, can operate on. Representability of $\mathbf{P}$ facilitates such a decomposition in the first case, while in the second case $\mathbf{P}$ also needs to have all adjoints. In both cases, we illustrate decompositions of α into a sequential cut of three poly-2-cells, the outer two of which serve as arguments for the poly-module transformations. The central poly-module then is applied to the remaining poly-2-cell. Its module box can be absorbed by either of the transformation boxes. (There is a small issue if either the source or target of an appropriate module is empty, for then α may have either no inputs or no outputs; in such a case it might be necessary to use the "unit barbells" of [2] to split the α, in essentially the same manner we shall illustrate now, where we have inputs and outputs.)

The strategy is to bundle together appropriate inputs and outputs of α by means of tensors, pars and possibly adjunctions into a selected input and a selected output, apply the central poly-module $\mathcal{P}$, respectively $\mathcal{Q}$, and then to decompose the selected 1-cells inside the neighboring transformation boxes.

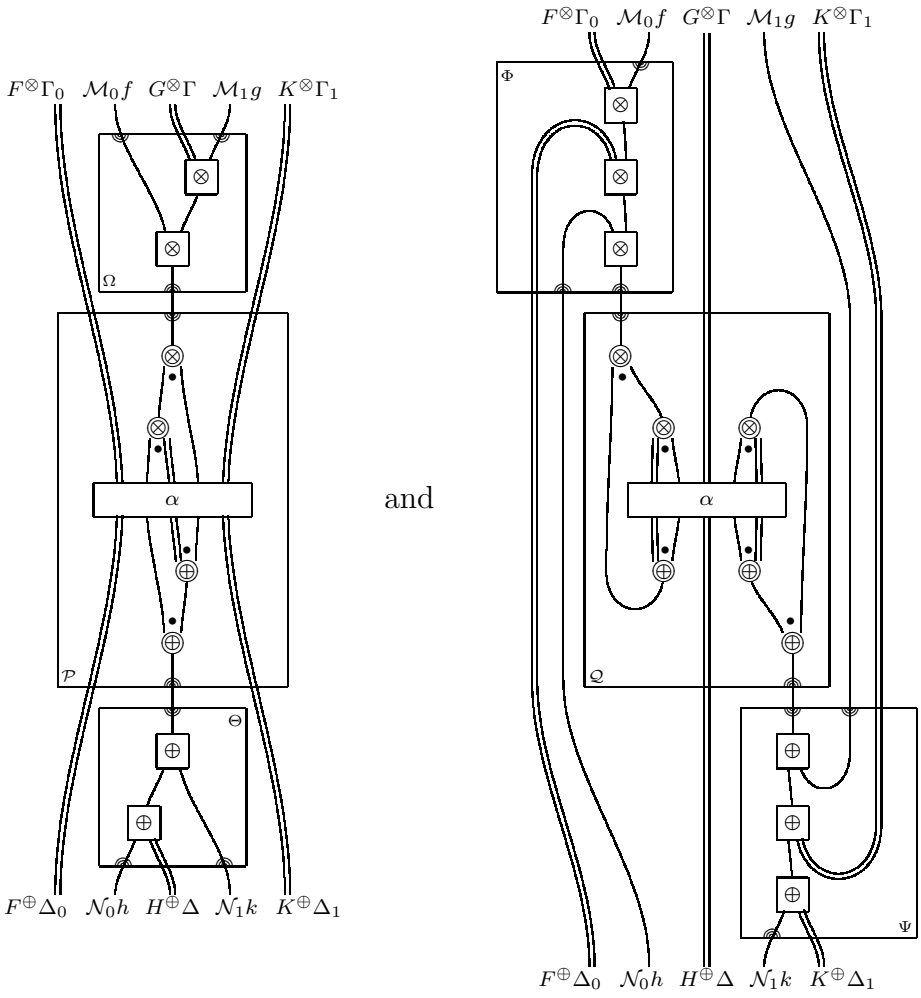

(26)

Such decompositions need not be unique for two reasons. First, the tensors, pars and adjoints used to facilitate this construction are only determined up to isomorphic 2-cell. However, the coherence guaranteed by representability assures us that such choices

will not affect the outcome, and are harmless. In addition, in the first case above we may bundle parts of Γ_0, Γ_1, Δ_0 and Δ_1 and split them off again inside the appropriate transformation boxes. Similarly, in the second case parts of Γ and Δ could be treated that way. In other words, there are seemingly many possible decompositions due to how we group the wires. However, using suitable expansions or contractions of the boxes, we can arrange this so that all such rearrangements occur in the domain poly-bicategory $\mathbf{P}$, where again coherence guarantees that all such rearrangements will produce the same poly-2-cells in the end.

So, it is straightforward to show that these do not affect the resulting poly-2-cell and that the axioms for cut are satisfied. Hence we have proved

4.10. Theorem. *If $\mathbf{P}$ is representable with all linear adjoints, the poly-functors from $\mathbf{P}$ into a poly-bicategory $\mathbf{P}'$ as 0-cells, the corresponding poly-modules as 1-cells and their transformations as poly-2-cells form a poly-bicategory $\mathbf{Mod}_{\mathbf{P}}(\mathbf{P}')$. This inherits adjoints from $\mathbf{P}'$.* ∎

Note this means that $\mathbf{Mod}_{\mathbf{P}}(\mathbf{P}')$ only makes sense if $\mathbf{P}$ is essentially a closed linear bicategory. The situation is similar if poly-functors are replaced by morphisms of poly-bicategories.

4.11. Representability. We have already seen representatives for poly-2-cells with null input or null output.

4.12. Proposition. *$\mathbb{T}_{\mathsf{F}}$ represents the tensor unit. Explicitly, given a representable poly-bicategory $\mathbf{P}$ with linear adjoints, two poly-functors F and G from $\mathbf{P}$ to a poly-bicategory $\mathbf{P}'$, and two (possibly empty) sequences of poly-modules*

$$\mathsf{F}_i \overset{\mathcal{M}_i}{\Longrightarrow} \mathsf{F}_{i+1} \quad \text{for} \quad i < p \qquad \text{and} \qquad \mathsf{G}_j \overset{\mathcal{N}_j}{\Longrightarrow} \mathsf{G}_{j+1} \quad \text{for} \quad j < q$$

with $\mathsf{F}_0 = \mathsf{F} = \mathsf{G}_0$ and $\mathsf{F}_p = \mathsf{G} = \mathsf{G}_q$, for every $i < p$, there is a bijective natural correspondence between poly-module transformations

$$\frac{\mathcal{M}_0, \mathcal{M}_1, \ldots, \mathcal{M}_{p-1} \Longrightarrow \mathcal{N}_0, \mathcal{N}_1, \ldots, \mathcal{N}_{q-1}}{\mathcal{M}_0, \mathcal{M}_1, \ldots, \mathcal{M}_{i-1}, (\mathbb{T}_{\mathsf{F}_i}), \mathcal{M}_i, \ldots, \mathcal{M}_{p-1} \Longrightarrow \mathcal{N}_0, \mathcal{N}_1, \ldots, \mathcal{N}_{q-1}}$$

Similarly, $\perp\!\!\!\perp_{\mathsf{F}}$ represents the par unit.

Proof. Given $\mathcal{M}_0, \mathcal{M}_1, \ldots, \mathcal{M}_{p-1} \overset{\Phi}{\Longrightarrow} \mathcal{N}_0, \mathcal{N}_1, \ldots, \mathcal{N}_{q-1}$, the image Φ° operates on poly-2-cells with $p+1$ chosen inputs and q chosen outputs by simply deselecting the ith chosen input and then operating like Φ.

Conversely, given

$\mathcal{M}_0, \mathcal{M}_1, \ldots, \mathcal{M}_{i-1}, (\mathbb{T}_{\mathsf{F}_i}), \mathcal{M}_i, \ldots, \mathcal{M}_{p-1} \overset{\Psi}{\Longrightarrow} \mathcal{N}_0, \mathcal{N}_1, \ldots, \mathcal{N}_{q-1}$

we define $\Psi_\circ$ as follows. If p inputs and q outputs are chosen for α, we arbitrarily select another input between the old inputs i and $i+1$. Then Ψ operates by applying $F_i^\otimes$ to the newly chosen input. This poses no problems unless the old inputs i and $i+1$ are direct neighbors. In that case we have to invoke the existence of tensor units in $\mathbf{P}$ and add a new input of the form $\top_A$ for the appropriate object A, in the process changing α to $\bar{\alpha}$. Again Ψ operates by applying $F_i^\otimes$ to the new input $\top_A$. Along this wire we can then absorb the $F_i^\otimes$–image of the representing multi-2-cell for ϵ_A to obtain a poly-2-cell in $\mathbf{P}'$ of the correct type.

These two operations are clearly inverses of each other, and are natural with respect to cut in $\mathbf{Mod}_\mathbf{P}(\mathbf{P}')$. ∎

4.13. Remark. In a similar fashion we see that for a morphism K of poly-bicategories the poly-module id_K simultaneously plays the role of the tensor unit and the par unit. This distinguishes the module poly-bicategory consisting of *morphisms* of poly-bicategories, their modules, and transformations, from the poly-bicategory $\mathbf{Mod}_\mathbf{P}(\mathbf{P}')$ of *poly-functors*, their modules, and transformations.

We now wish to consider the representability of the tensor and the par of two modules $\mathsf{F} \xRightarrow{\mathcal{K}} \mathsf{G}$ and $\mathsf{G} \xRightarrow{\mathcal{L}} \mathsf{H}$, with representing 1-cells $\mathcal{K} \boxtimes \mathcal{L}$ and $\mathcal{K} \boxplus \mathcal{L}$, respectively. We shall require the appropriate representability both in $\mathbf{P}$ and in $\mathbf{P}'$. In fact, under modest assumptions, this is necessary. Of course, $\mathbf{P}$ must be closed and representable in order to consider $\mathbf{Mod}_\mathbf{P}(\mathbf{P}')$. As for $\mathbf{P}'$, consider the case where it has units: then $\mathbf{P}'$ is embedable in $\mathbf{Mod}_\mathbf{1}(\mathbf{P}')$, which is representable if $\mathbf{Mod}_\mathbf{P}(\mathbf{P}')$ is. So, at least in the case where $\mathbf{P}'$ has units (*i.e.* is nullary representable), we know representability at the module level can only be possible if we have representability at the underlying poly-bicategory level. Thus, for this section, we shall suppose $\mathbf{P}, \mathbf{P}'$ are both linear bicategories, and that $\mathbf{P}$ is closed. If necessary, we may regard these as representable poly-bicategories, of course.

4.14. Theorem. *If $\mathbf{P}$ and $\mathbf{P}'$ are linear bicategories, if $\mathbf{P}$ is closed, and if $\mathbf{P}'$ is locally complete and cocomplete so that the tensor $\otimes$ preserves colimits in each argument and the par $\oplus$ preserves limits in each argument, then $\mathbf{Mod}_\mathbf{P}(\mathbf{P}')$ is representable.*

Proof. We saw in Proposition 3.6 that having all adjoints (being closed) allows one to reduce a poly setting to a multi setting; a similar effect may be used here, so that the proof of this Theorem is essentially bicategorical. We shall derive it as a corollary to the proof of the similar result for bicategories, Theorem 4.19. ∎

4.15. Poly-modules over poly-monads. Let us take a closer look at the motivating case of domain $\mathbf{1}$. Recall that poly-functors from $\mathbf{1}$ are essentially poly-monads on the codomain poly-bicategory [6]. We shall denote $\mathbf{Mod}_\mathbf{1}(\mathbf{P})$ by $\mathbf{Mod}(\mathbf{P})$, the poly-bicategory of poly-monads, poly-modules and their transformations. Then the previous considerations simplify considerably. A poly-module $\mathcal{K}$ from F on A to G on B consists

of a carrier $A \xrightarrow{k} B$ together with actions and coactions

$$f^{\otimes}, k \xRightarrow{\sigma_L^{\oplus}} k \xLeftarrow{\sigma_R^{\oplus}} k, g^{\otimes} \qquad\qquad f^{\oplus}, k \xLeftarrow{\sigma_L^{\otimes}} k \xRightarrow{\sigma_R^{\otimes}} k, g^{\oplus} \tag{27}$$

If $\mathbf{P}$ is representable and $\mathsf{G} \xRightarrow{\mathcal{L}} \mathsf{H} \xLeftarrow{\mathcal{N}} \mathsf{F}$ are further poly-modules into a poly-monad H on C, a poly-module transformation $\mathcal{K}, \mathcal{L} \xRightarrow{\Phi} \mathcal{N}$ according to the construction above corresponds to a 2-cell $k \otimes \ell \xRightarrow{\varphi} n$ such that the following composites agree in $\mathbf{P}\langle A, C\rangle$, *cf.* Example 1.5(2).

$$k \otimes g^{\otimes} \otimes \ell \underset{k\otimes\sigma_L^{\oplus}}{\overset{\sigma_R^{\oplus}\otimes\ell}{\Rightrightarrows}} k \otimes \ell \xRightarrow{\varphi} n \tag{28}$$

We then recover the essentially familiar result that poly-modules between poly-monads into $\mathbf{P}$ are representable as inputs, provided 1-cells in $\mathbf{P}$ have this property and $\mathbf{P}$ locally has reflexive coequalizers that are preserved by representing multi-2-cells, *i.e.* by tensors.

4.16. Proposition. *Let $\mathbf{P}$ be a linear bicategory with reflexive coequalizers and equalizers preserved by $\otimes$ and $\oplus$, respectively. Then*

1. $\mathbf{Mod}(\mathbf{P})$ *is representable.*
2. $\mathbf{Mod}(\mathbf{P})$ *contains $\mathbf{P}$ as a full sub-poly-bicategory and admits a 2-faithful forgetful morphism of poly-bicategories $\mathbf{Mod}(\mathbf{P}) \xrightarrow{\mathsf{U}_{\mathbf{P}}} \mathbf{P}$ that preserves and reflects adjoints.*

Proof.

1. Clear.
2. $\mathsf{U}_{\mathbf{P}}$ maps poly-monads to their underlying objects and poly-modules to their carrier.

   Consider poly-monads F on A and G on B together with poly-modules $\mathsf{F} \xRightarrow{\mathcal{M}} \mathsf{G}$ and $\mathsf{G} \xRightarrow{\mathcal{N}} \mathsf{F}$. Now $\mathcal{M} \dashv\!\shortmid \mathcal{N}$ in $\mathbf{Mod}(\mathbf{P})$ implies the existence of poly-module transformations $\top_{\mathsf{F}} \xRightarrow{\Phi} \mathcal{M} \boxplus \mathcal{N}$ and $\mathcal{N} \boxtimes \mathcal{M} \xRightarrow{\Psi} \perp\!\!\!\perp_{\mathsf{G}}$ with underlying 2-cells $f^{\otimes} \xRightarrow{\tau} m \boxplus n$ and $n \boxtimes m \xRightarrow{\gamma} g^{\oplus}$, respectively. Then the composites

   $$\top_A \xRightarrow{\eta} f^{\otimes} \xRightarrow{\varphi} m \boxplus n \Longrightarrow m \oplus n \quad \text{and}$$
   $$n \otimes m \rightarrowtail n \boxtimes m \xRightarrow{\psi} g^{\oplus} \xRightarrow{\epsilon} \perp_B$$

   yield an adjunction $m \dashv\!\shortmid n$ in $\mathbf{P}$.

   Conversely, if $m \xrightarrow{\langle\xi,\zeta\rangle\!\shortmid} n$ in $\mathbf{P}$, one easily sees that the composite

   $$f^{\otimes} \Longrightarrow f^{\otimes} \otimes \top_A \xRightarrow{1\otimes\xi} f^{\otimes} \otimes (m \oplus n) \xRightarrow{\delta_L} (f^{\otimes} \otimes m) \oplus n \xRightarrow{\sigma_L^{\oplus}\oplus 1} m \oplus n$$

   equalizes the parallel pair of 2-cells that defines $m \boxplus n$ *via* an equalizer. This induces a 2-cell $f^{\otimes} \xRightarrow{\xi'} m \boxplus n$. Dually, we get $n \boxtimes m \xRightarrow{\zeta'} g^{\oplus}$. A straightforward computation then shows that these in fact are carriers of poly-modules $\top_{\mathsf{F}} \xRightarrow{\xi'} \mathcal{M} \boxplus \mathcal{N}$ and $\mathcal{N} \boxtimes \mathcal{M} \xRightarrow{\zeta'} \perp\!\!\!\perp_{\mathsf{G}}$ that constitute an adjunction $\mathcal{M} \dashv\!\shortmid \mathcal{N}$ in $\mathbf{Mod}(\mathbf{P})$.

∎

We shall call a poly-functor $\mathbf{P} \xrightarrow{\mathsf{F}} \mathbf{P}'$ *strict on units* if it preserves the representation of units, *i.e.* if a tensor unit representative $\top_X$ exists in $\mathbf{P}$, then $F^{\otimes}(\top_X)$ represents the tensor unit (usually denoted $\top_{F(X)}$) in $\mathbf{P}'$, and dually, if a par unit representative $\bot_X$ exists in $\mathbf{P}$, then $F^{\oplus}(\bot_X) = \bot_{F(X)}$ represents the par unit in $\mathbf{P}'$. Any linear functor between linear bicategories $\mathbf{P} \xrightarrow{\mathsf{F}} \mathbf{P}'$ extends (*via* the inclusion of $\mathbf{P}'$ into $\mathbf{Mod}(\mathbf{P}')$) to a poly-functor $\mathbf{P} \xrightarrow{\tilde{\mathsf{F}}} \mathbf{Mod}(\mathbf{P}')$ which is strict on units, so that $\mathsf{F} = \tilde{\mathsf{F}} \;;\; \mathsf{U}_{\mathbf{P}'}$. (This has the curious corollary that every linear functor factors as a linear functor which is strict on units, followed by a morphism.) Of course, there is an adjunction here, but we shall leave this to the reader, as it takes us astray from our intended route.

4.17. Modules in the multi-bicategory context. The definitions of modules and transformations of modules carries over easily to the multi context. However, some of the results we obtained above warrant special attention in this context.

First note that an examination of the proof of Theorem 4.10 shows that the only need for linear adjoints is because of the possible presence of many outputs from poly-2-cells. In the case of multi-2-cells, we can dispense with that assumption, and so we can get a somewhat stronger result.

4.18. Theorem. *If* $\mathbf{P}$ *is a bicategory,* $\mathbf{P}'$ *a multi-bicategory, then multi-functors from* $\mathbf{P}$ *to* $\mathbf{P}'$ *(as 0-cells), the corresponding multi-modules (as 1-cells), and their transformations (as multi-2-cells) form a multi-bicategory* $\mathbf{Mod}_{\mathbf{P}}(\mathbf{P}')$.

We mentioned that Theorem 4.14 is essentially a (multi-)bicategorical result; we record that version of the theorem here. Recall that the assumption that $\mathbf{P}$ is closed (in the bicategorical sense) is weaker than the previous assumption that $\mathbf{P}$ is (poly) closed (*i.e.* has all linear adjoints).

4.19. Theorem. *If* $\mathbf{P}$ *is a closed bicategory, if* $\mathbf{P}'$ *is a locally cocomplete bicategory so that the tensor* $\otimes$ *preserves colimits in each argument, then* $\mathbf{Mod}_{\mathbf{P}}(\mathbf{P}')$ *is representable (and so essentially is a bicategory).*

Proof. We suppose we have lax functors $\mathbf{P} \xrightarrow{\mathsf{F},\mathsf{G},\mathsf{H}} \mathbf{P}'$ and two modules $\mathsf{F} \xRightarrow{\mathcal{K}} \mathsf{G}$ and $\mathsf{G} \xRightarrow{\mathcal{L}} \mathsf{H}$, and want to construct a representing 1-cell $\mathcal{K} \boxtimes \mathcal{L}$ and a universal multi-2-cell $\mathcal{K}, \mathcal{L} \xRightarrow{\Upsilon} \mathcal{K} \boxtimes \mathcal{L}$. Υ must be a module transformation, which means that for any multi-2-cell α in $\mathbf{P}$, and for any choice of two inputs (the $\mathcal{K}$ and $\mathcal{L}$ ports), we must specify a "module transformation box":

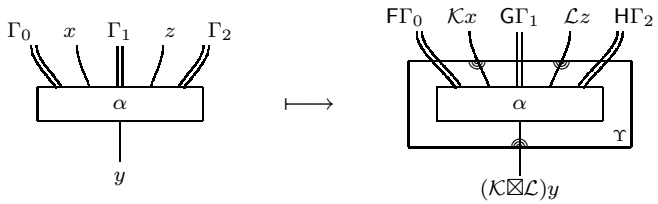

(29)

But we can tensor together the Γ_0, x wires, the Γ_1 wires, and the z, Γ_2 wires so that only three wires enter the Υ transformation box; inside the Υ-box then we would split these apart again to enter α, and above the Υ-box we would have three boxes where the tensoring must take place: a $\mathcal{K}$-box for Γ_0, x, a G-box for Γ_1, and a $\mathcal{L}$-box for z, Γ_2. Once we establish Υ as a module transformation, such a configuration is equivalent to the required one above, since the Υ-box could absorb the other three boxes and then the tensoring can be undone.

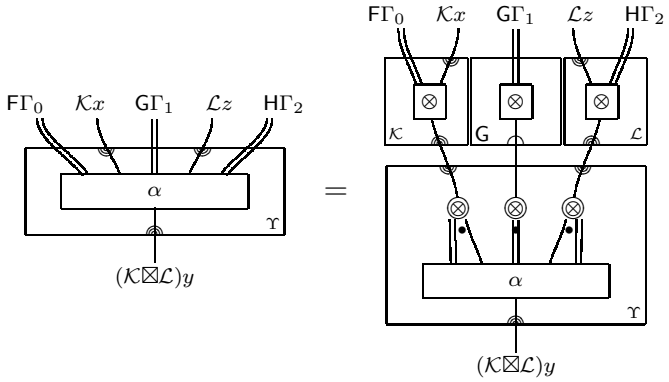

(30)

Hence it suffices to suppose that α has exactly three input wires, x which enters *via* a $\mathcal{K}$ port, y' which enters *via* an auxiliary (G) port, and z which enters *via* a $\mathcal{L}$ port. Since we are in the multi setting, there is a sole output wire y which exits *via* the $\mathcal{K} \boxtimes \mathcal{L}$ port.

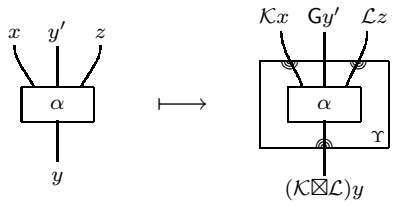

(31)

There is a further simplification we can make. Given any α as above, we can use the

closed structure of $\mathbf{P}$ to rewrite it as follows.

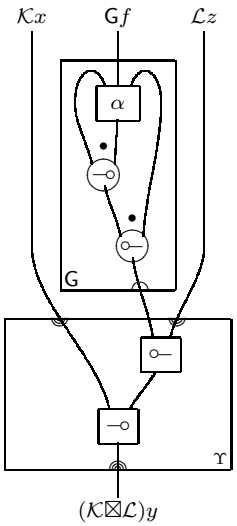

(32)

So we only have to construct Υ-boxes for α's which have this particular form given by the $\multimap$ and $\circ\!\!-$ links.

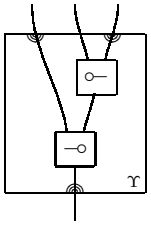

(33)

We shall define such a Υ-box by a colimit. The diagram we must construct for this colimit is constructed as follows from a source and a sink object and three sorts of apex objects.

1. For each 1-cell x in $\mathbf{P}$ with $\partial_0(x) = \partial_0(y)$, a (source) object

$$\bullet \xleftarrow[x]{} \bullet \xrightarrow[y]{} \bullet$$

   which becomes $\mathcal{K}(x) \otimes \mathcal{L}(x \multimap y)$;

2. for each 1-cell z in $\mathbf{P}$ with $\partial_1(z) = \partial_1(y)$, a (sink) object

$$\bullet \xrightarrow[y]{} \bullet \xleftarrow[z]{} \bullet$$

   which becomes $\mathcal{K}(y \circ\!\!- z) \otimes \mathcal{L}(z)$;

3. for each pair of 1-cells x, z in $\mathbf{P}$ with $\partial_0(x) = \partial_0(y)$, $\partial_1(z) = \partial_1(y)$, an (apex) object and a span (two arrows).

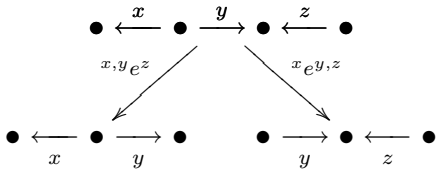

The apex object becomes $\mathcal{K}(x) \otimes \mathsf{G}(x \multimap y \circ\!\!- z) \otimes \mathcal{L}(z)$, and the two arrows e become

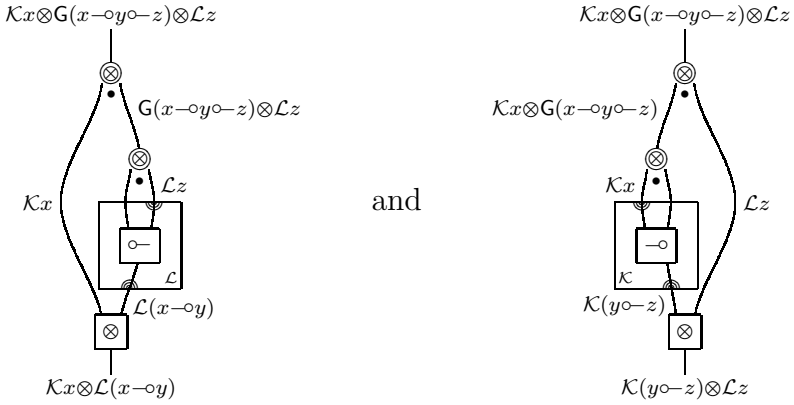

(34)

4. (dinaturality) for each 2-cell $x \overset{f}{\Longrightarrow} x'$ an apex object and a span

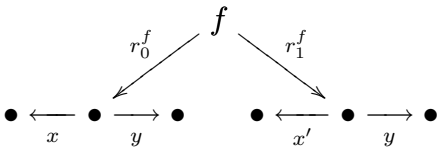

which span becomes

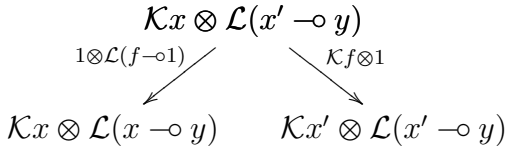

5. (dinaturality) for each 2-cell $z \overset{g}{\Longrightarrow} z'$ an apex object and a span

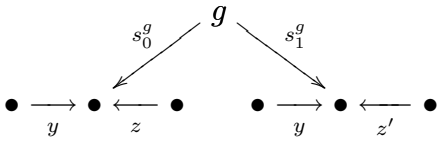

which span becomes

$$\begin{array}{ccc} & \mathcal{K}(y \circ\!\!- z') \otimes \mathcal{L}z & \\ {\scriptstyle \mathcal{K}(1 \circ\!\!- g)\otimes 1} \swarrow & & \searrow {\scriptstyle 1 \otimes \mathcal{L}g} \\ \mathcal{K}(y \circ\!\!- z) \otimes \mathcal{L}z & & \mathcal{K}(y \circ\!\!- z') \otimes \mathcal{L}z' \end{array}$$

The colimit of this diagram is $(\mathcal{K} \boxtimes \mathcal{L})y$, and the Υ-box, corresponding to the circuit (33), is given by the colimit injection from the apex object $\mathcal{K}x \otimes \mathsf{G}(x \multimap y \circ\!\!- z) \otimes \mathcal{L}z$ into the colimit $(\mathcal{K} \boxtimes \mathcal{L})y$.

We need to show $\mathcal{K} \boxtimes \mathcal{L}$ forms a module; to do this we examine the Υ-box, and as before, it suffices to consider only multi-cells with three inputs. We start with some partial results. First, we show that the Υ-box has the "absorption" properties corresponding to the coherence conditions for a module transformation, for all but the exit $\mathcal{K} \boxtimes \mathcal{L}$ port. In fact, for auxiliary input ports this is immediate, and the argument for the $\mathcal{L}$ port is dual to that for the $\mathcal{K}$ port, which is given by the following considerations.

Without loss in generality, we shall suppose the box we want absorbed by a Υ-box is a $\mathcal{K}$-box with a 2-cell $x' \xRightarrow{\beta} x$ inside and that inside the Υ-box is a multi-2-cell $x, y', z \xRightarrow{\alpha} y$ with the $\mathcal{K}$ and $\mathcal{L}$ ports chosen on the x, z wires. (So we are supposing that $\mathcal{K}$-box has only two ports, both principal, and that α has only three input wires, with the auxiliary port through the middle wire — having additional auxiliary input ports may be handled by suitable tensoring and un-tensoring of wires, which is permissible since the tensor preserves the colimit in each argument.) We can cut β with α to produce $x', y', z \xRightarrow{\beta;\alpha} y$. We can apply $\mathcal{K}$ to β, Υ to α, and Υ to $\beta;\alpha$; we can cut $\mathcal{K}\beta$ and $\Upsilon\alpha$ to produce $\mathcal{K}x', \mathsf{G}y', \mathcal{L}z \xRightarrow{\mathcal{K}\beta;\Upsilon\alpha} (\mathcal{K} \boxtimes \mathcal{L})y$. We then want to show that this is equal to $\Upsilon(\beta\ ;\ \alpha)$.

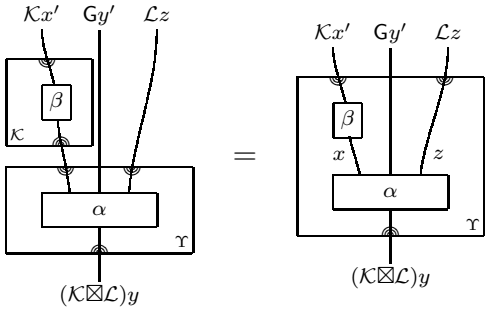

(35)

The key step is to represent these two multi-2-cells in terms of the Υ-box containing the $\multimap$ and $\circ\!\!-$ links (33) which we shall refer to as $\Upsilon(\mathrm{ve}\ ;\ \mathrm{ev})$, since inside that Υ-box is the cut of the two evaluation links ev and ve. $\mathcal{K}\beta\ ;\ \Upsilon\alpha$ equals the result of cutting $\mathcal{K}\beta$ and $\mathsf{G}(\alpha^{\multimap\circ\!\!-})$ with $\Upsilon(\mathrm{ve}\ ;\ \mathrm{ev})$, where $y' \xRightarrow{\alpha^{\multimap\circ\!\!-}} x \multimap y \circ\!\!- z$ is the evident exponential transpose. $\Upsilon(\beta\ ;\ \alpha)$ equals the result of a similar cut with $\Upsilon(\mathrm{ve}\ ;\ \mathrm{ev})$, but now that box uses the x' wire instead of the x wire, and this is cut with a G-box containing a variant of $\alpha^{\multimap\circ\!\!-}$ which replaces α with $\beta\ ;\ \alpha$. This results in the cut of $\Upsilon(\mathrm{ve}'\ ;\ \mathrm{ev}')$ with

$\mathsf{G}((\beta\,;\alpha)^{-\circ\circ-}) = \mathsf{G}(\alpha^{-\circ\circ-})\,;\mathsf{G}(\beta \multimap y \circ\!\!- z)$. Finally we note that these expanded cells are equal, by the dinaturality we built into the diagram for $\mathcal{K} \boxtimes \mathcal{L}$.

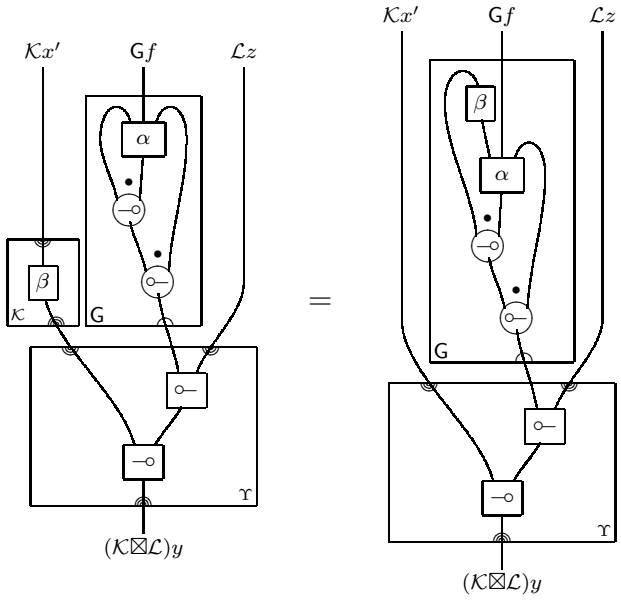

(36)

We must now show how, given such an α we can construct a $\mathcal{K} \boxtimes \mathcal{L}$-box; this follows from universality. Given $x, y', z \xRightarrow{\alpha} y$, we form $x, x', x' \multimap y', z \xRightarrow{\mathrm{ev};\alpha} y$ by cutting with $x', x' \multimap y' \xRightarrow{\mathrm{ev}} y'$, and then construct the Υ-box

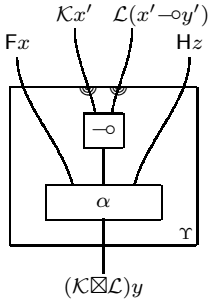

(37)

These give cocone maps from which we deduce the $\mathcal{K} \boxtimes \mathcal{L}$ module box

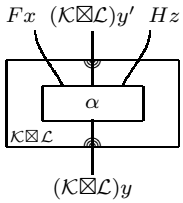

(38)

as required.

But the boxes (for Υ and for $\mathcal{K} \boxtimes \mathcal{L}$) are not yet guaranteed to satisfy the coherence conditions (we need to show that the $\mathcal{K} \boxtimes \mathcal{L}$-box has the "absorption properties", and that Υ represents $\mathcal{K}, \mathcal{L}$). It is easy to see that the $\mathcal{K} \boxtimes \mathcal{L}$-box has the right absorption properties at auxiliary ports, but for the principal input port we shall use the following technical lemma.

4.20. Lemma. *Given the box data for a multi-module transformation*

$$\Gamma, \mathcal{K}, \mathcal{L}, \Gamma' \xRightarrow{\Phi} \mathcal{M}$$

which satisfies the absorption properties on the $\mathcal{K}$ and $\mathcal{L}$ ports, we can construct the box data for a module transformation

$$\Gamma, \mathcal{K} \boxtimes \mathcal{L}, \Gamma' \xRightarrow{\Phi'} \mathcal{M}$$

which satisfies the absorption property on the $\mathcal{K} \boxtimes \mathcal{L}$ port.

Note that by "the box data" we mean we can construct the appropriate box, although we do not suppose it has the absorption properties for a module transformation, other than as stated. Note that at present we do not even know that $\mathcal{K} \boxtimes \mathcal{L}$ is a module. This will follow from this lemma, limited in scope though it is, with some additional argument. Note also that this lemma also lays out half of the bijection needed to see $\mathcal{K} \boxtimes \mathcal{L}$ is a tensor representative of $\mathcal{K}, \mathcal{L}$ *via* Υ.

Proof. We shall abbreviate Γ with a single functor F, and similarly H for Γ', without loss in generality.

As with the construction of the $\mathcal{K} \boxtimes \mathcal{L}$-box, we use the universality of the colimit. From $x, y', z \xRightarrow{\alpha} y$, we form $x, x', x' \multimap y', z \xRightarrow{\mathrm{ev};\alpha} y$ by cutting with $x', x' \multimap y' \xRightarrow{\mathrm{ev}} y'$, as above, and then apply the Φ box to this.

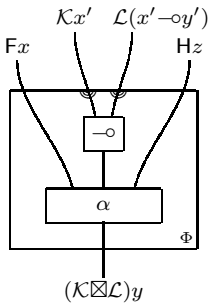

(39)

As before, this gives us a cocone map, and taking the comparison map from the colimit we get the Φ'-box data. To see that this also satisfies the absorption properties on the $\mathcal{K} \boxtimes \mathcal{L}$ port, we argue much as we did for Υ. Given a $\mathcal{K} \boxtimes \mathcal{L}$-box containing a multi-2-cell β

above the principal $\mathcal{K} \boxtimes \mathcal{L}$ port on the Φ'-box, (for clarity, we shall assume for the circuit that β is a 2-cell),

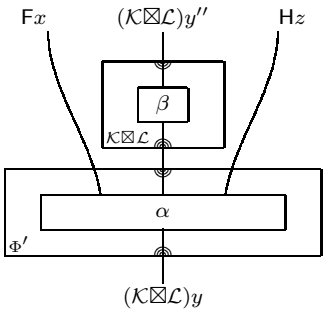

(40)

we first consider the cone which produces this box (*i.e.* which produces the arrow from the colimit $\mathcal{K} \boxtimes \mathcal{L}$). The cone maps all have the form of a Υ-box, which can be decomposed into the cut of an $\mathcal{L}$-box (containing the 2-cell β and some $\multimap$ and/or $\circ\!\!-$ links), possibly together with some tensor boxes, and the standard Υ-box with the $\multimap$ and/or $\circ\!\!-$ links.

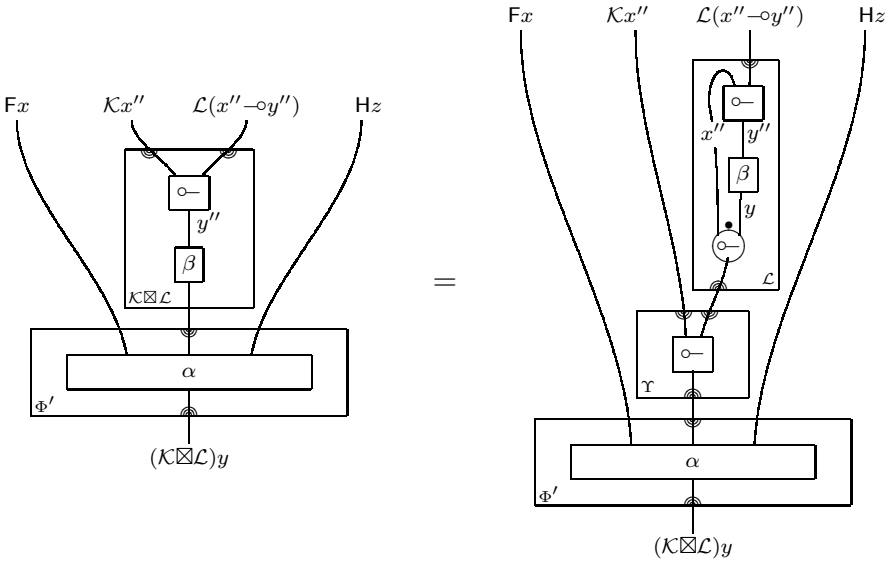

(41)

The latter form injections from the colimit, and so this Υ-box and the $\mathcal{L}$-box can be

merged to a Υ-box, which can be absorbed into the Φ-box, giving a new cocone box.

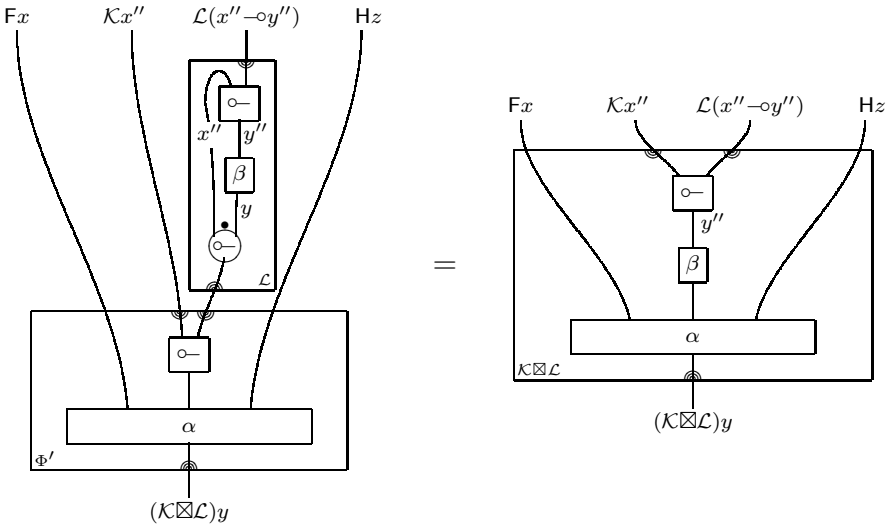

(42)

Passing to the comparison map now gives the necessary absorption property. ∎

4.21. Corollary. *$\mathcal{K}\boxtimes\mathcal{L}$ is a module.*

Proof. We only have to show absorption along the output wire of a $\mathcal{K}\boxtimes\mathcal{L}$-box — but the only sort of box that can be absorbed along such a wire (because of typing constraints) is another $\mathcal{K}\boxtimes\mathcal{L}$-box, and since the lower box is formed from Υ-boxes, the lemma applies. ∎

4.22. Corollary. *Υ is a multi-module transformation.*

Proof. (This follows the proof of the lemma rather than its statement, with some variation.) We have to show the absorption property on the output port. As with the previous corollary, the only type of box that can be absorbed is a $\mathcal{K}\boxtimes\mathcal{L}$-box. Again, we decompose the Υ-box into a $\mathcal{L}$-box atop a ev Υ-box and note that the latter is a colimit injection, which allows one to rewrite this as a Υ-box below the $\mathcal{L}$-box, for which we already know the absorption property holds. ∎

4.23. Corollary. *(We use the notation of the Lemma.) If Φ is a multi-module transformation then Φ' is also a multi-module transformation. Furthermore, the correspondence $\Phi \leftrightarrow \Phi'$ is naturally bijective.*

Proof. We now know $\mathcal{K}\boxtimes\mathcal{L}$ is a module and that Φ' has the absorption property along that wire, and inherits absorption on the other wires from Φ. So all that remains to show is that the correspondence $\Phi \leftrightarrow \Phi'$ is a natural bijection. The naturality follows

from the fact that this correspondence is essentially obtained by cutting with Υ: from Φ', construct the corresponding $\Phi := \Upsilon \mathbin{;} \Phi'$ *via* the canonical cut with $\mathcal{K}, \mathcal{L} \xRightarrow{\Upsilon} \mathcal{K} \boxtimes \mathcal{L}$. We shall now indicate the necessary equivalences.

$\Phi \mapsto \Phi' \mapsto \Upsilon \mathbin{;} \Phi'$

Given any α, the $(\Upsilon \mathbin{;} \Phi')\alpha$ box may be decomposed in the by-now-familiar way into a colimit injection atop a Φ' box, and so we can reduce this to the underlying Φ box, giving the required equivalence.

$\Phi' \mapsto \Upsilon \mathbin{;} \Phi' \mapsto (\Upsilon \mathbin{;} \Phi')'$

The essence of this direction is the observation that under the construction $\Phi \mapsto \Phi'$, Υ becomes the identity, and cutting with the identity is the identity. ∎

This concludes the proof of Theorem 4.19. ∎

Finally, we use this to derive Theorem 4.14. The point is that, analogous to the proof of Proposition 3.6, having all adjoints allows us to bend wires so that any poly-2-cell reduces to a multi-2-cell.

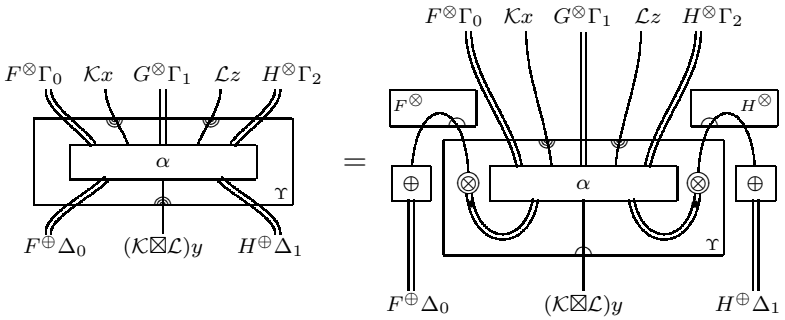

(43)

There is one place in the proof of Theorem 4.19 where such a reduction is insufficient, *viz.* Lemma 4.20. However if we replace $\mathcal{M}$ in that Lemma by an arbitrary sequence of poly-modules, the proof goes through unchanged. Hence we have the proof in the poly setting as well.

4.24. Remark. There seem to be some baroque complications in the multi-setting, compared to the usual setting where the domain bicategory is **1**, so that the modules are defined on a monad T. In that case the current proof would lead us to expect to have to construct the colimit of the following pushout.

$$\begin{array}{ccc} \mathcal{M} \otimes \mathsf{T} \otimes \mathcal{N} & \xrightarrow{1\otimes\sigma} & \mathcal{M} \otimes \mathcal{N} \\ \downarrow{\scriptstyle \sigma\otimes 1} & & \downarrow{\scriptstyle p} \\ \mathcal{M} \otimes \mathcal{N} & \xrightarrow[q]{} & \mathcal{M} \boxtimes \mathcal{N} \end{array}$$

But since $1 \otimes \eta \otimes 1$ is a section for both $\sigma \otimes 1$ and $1 \otimes \sigma$, $p = q$ and the pushout is a reflexive coequalizer. Hence we regain the usual construction.

4.25. Remark. After we had developed the proof above (of Theorem 4.19) we began to wonder whether the assumption of closedness of the domain bicategory was really necessary. Notice that in the application of primary interest in this paper, closedness was already required to ensure that module transformations composed, and so in this context the assumption is quite natural.

In joint work with Richard Wood, we have revisited this issue: in [9] we realized that indeed the closedness of the domain bicategory is not necessary. Furthermore, under his guidance, we were able to re-express the proof in more standard bicategorical terms and as a consequence to simplify it.

Rather than include this simpler proof in the current paper, we decided that this bicategorical story really merited a separate exposition [9]. Not only would this make it more accessible to those who work with bicategories, but also it would then be possible to describe the connection to the work of Lack and Street [18] on wreaths, all of which could not easily have been done within the scope of this document.

So we have left the above proof untouched; it may be somewhat baroque, but we think it expresses ideas of independent merit.

Examples In view of the identification of categories as monads in **Span**(**set**), a module in that comulti-bicategory is an ordinary module on a category. We also recall (from the Introduction) that Walters' notion [27] of a module between Benabou's polyads [1] is an example of the modules of this paper.

5. Linear natural transformations

Initially we had considered linear versions of lax natural transformations as morphisms between linear functors. When these only yielded one "horizontal" composition, we turned to linear modules instead and developed the poly-notions. Now we address the question about the precise relationship between these two concepts and show that "linear natural transformations" can be viewed as special poly-modules.

For lax functors F and G between ordinary bicategories $\mathbf{B}$ and $\mathbf{C}$ the notion of lax natural transformation $F \overset{\omega}{\Longrightarrow} G$ is established: to every $\mathbf{B}$–object A it assigns a 1-cell $FA \xrightarrow{\omega A} GA$ and to every pair of objects $\langle A, B\rangle$ a natural transformation

$$\begin{tikzcd} \mathbf{B}\langle A,B\rangle \arrow[r, "F\langle A,B\rangle"] \arrow[d, "G\langle A,B\rangle"'] \arrow[dr, phantom, "\omega\langle A,B\rangle \Swarrow"] & \mathbf{C}\langle FA,FB\rangle \arrow[d, "\mathbf{C}\langle FA,\omega B\rangle"] \\ \mathbf{C}\langle GA,GB\rangle \arrow[r, "\mathbf{C}\langle \omega A,GB\rangle"'] & \mathbf{C}\langle FA,GB\rangle \end{tikzcd} \tag{44}$$

Its value at $f \in \mathbf{B}\langle A, B\rangle$ is a 2-cell $Ff \otimes \omega B \Longrightarrow \omega A \otimes Gf$, which for brevity we denote by ωf. The 2-cell orientation is that used in [11]; it reflects the orientation of ω *from* F *to* G also at the level of 2-cells. Moreover, it parallels the usage of "monoidal transformations" in [8]. The presence of tensors in both domain and codomain implies that in a multi- or

poly-bicategory this notion cannot be interpreted unless $\otimes$ is representable. Hence in this section we restrict our attention to the representable case.

5.1. Linear natural transformations and linear modifications. Following the pattern discussed at the beginning of Section 3, a "linear natural transformation" between linear functors ought to consist of two components, a lax natural transformation and an opcolax natural transformation, that are compatible in a suitable sense. "Linear modifications" can then be defined in the same vein.

Consider linear functors F, G between linear bicategories $\mathbf{P}$ and $\mathbf{P}'$. A *linear natural transformation* $\mathsf{F} \overset{\omega}{\Longrightarrow} \mathsf{G}$ consists of the following data

1. a lax natural transformation $\omega^{\otimes}\colon F^{\otimes} \Longrightarrow G^{\otimes}$ and an opcolax natural transformation $\omega^{\oplus}\colon G^{\oplus} \Longrightarrow F^{\oplus}$,
2. for every object A of $\mathbf{P}$, the 1-cells $FA \xrightarrow{\omega^{\otimes} A} GA$ and $GA \xrightarrow{\omega^{\oplus} A} FA$ are cyclic linear adjoints, $\omega^{\otimes} A \Vdash \omega^{\oplus} A$,
3. for every 1-cell $A \xrightarrow{f} B$ of $\mathbf{P}$, the multi-2-cell and comulti-2-cell
$$F^{\otimes} f, \omega^{\otimes} B \overset{\omega^{\otimes} f}{\Longrightarrow} \omega^{\otimes} A \otimes G^{\otimes} f \qquad \text{and} \qquad G^{\oplus} f \oplus \omega^{\oplus} B \overset{\omega^{\oplus} f}{\Longrightarrow} \omega^{\oplus} A, F^{\oplus} f$$
respectively, (usually represented by the following switching links)

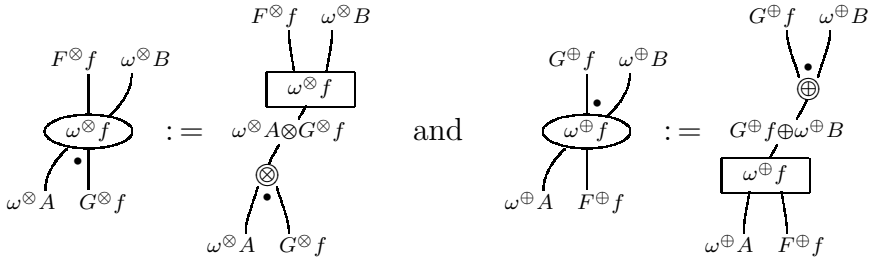

(45)

are subject to the following naturality condition. For an arbitrary poly-2-cell α inside a tensor or par functor box, either you can (canonically) have an ω node at the principal port or you can (canonically) have an ω node at each auxiliary port (and not at the principal port), and these circuits are equivalent. This is illustrated by the following circuit equation (there is a dual for the par boxes).

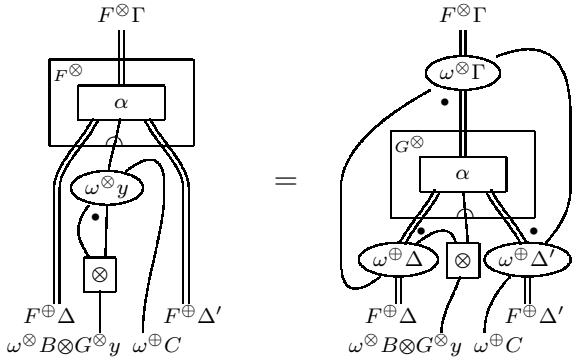

(46)

5.2. Remark. We can decompose the general naturality condition above into "atomic" cases, and to give the requirements as a series of simpler circuit equivalences. First, the laxness of the tensor component $\omega^{\otimes}$:

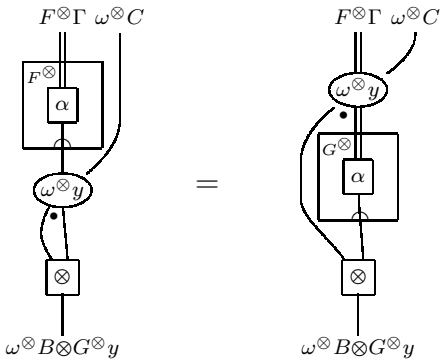

(47)

where α is a representing multi-2-cell for either $\otimes$ or $\top$. There are dual conditions for the par functor boxes.

Next we have equations which account for the naturality required when a tensor link appears inside a par functor box, or dually, when a par link appears inside a tensor functor box. The former are these, where α is a representing multi-2-cell for either $\otimes$ or $\top$.

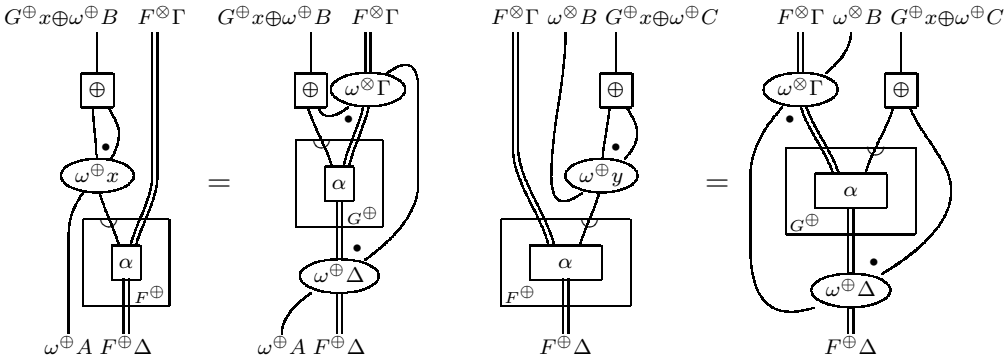

(48)

For the par, we have the duals, for example, the following where α is a representing comulti-2-cell for either $\oplus$ or $\perp$.

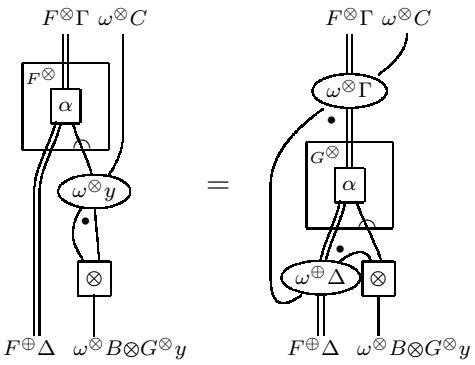

(49)

Finally, we assume ordinary categorical naturality (that is, with respect to ordinary 2-cells). An explicit list of equations is given in the Appendix.

If **P** is closed, then the second family of conditions (involving tensor links in par boxes, and dually) is a consequence of the first family (laxness and colaxness) — indeed, as we have already seen, all the structure may be reduced to merely considering the tensor structure (or dually, to the par structure).

In [8] a notion of linear natural transformation was introduced which lacked the 1-cell components. That notion can be explained as a transformation whose 1-cell components are given by the unit/counit cyclic adjunction: $\omega^{\otimes}A = \top_A$ and $\omega^{\oplus}A = \bot_A$. In effect then we can just remove these wires entirely. Since the ω nodes are now circuits (morphisms), we may represent them by component boxes. The various naturality conditions then simplify to two conditions, which exchanges an ω link on a principal port for ones on all auxiliary ports (appropriately typed).

5.2.1. Linear modifications. Although we shall not need this notion in this paper, we record here the definition of a linear modification, as a pair of suitably linked lax/oplax modifications. Recall that for ordinary lax functors $F, G\colon \mathbf{B} \longrightarrow \mathbf{C}$ and lax transformations $\omega, \lambda\colon F \Longrightarrow G$, a *lax modification* is a family of 2-cells $\omega A \xRightarrow{qX} \lambda X$ in $\mathbf{C}$, such that for any 1-cell $A \xrightarrow{f} B$ in $\mathbf{B}$ the following 2-cells coincide in $\mathbf{C}$:

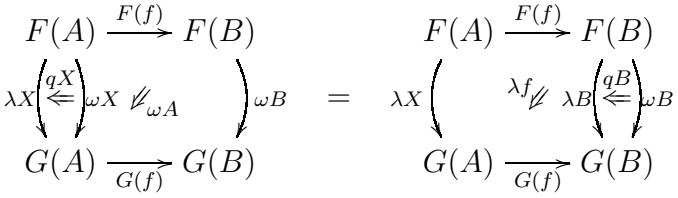

or in terms of circuit diagrams

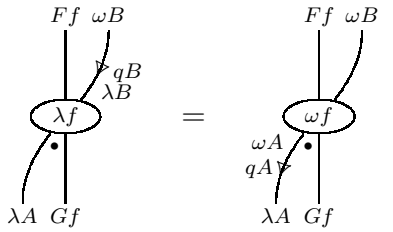

(50)

where the components of the transformation appear as open triangles along the α - wires pointing in the direction of the modification (*i.e.*, downwards for the tensor). We already specified the switching links, although not necessary in the context of ordinary bicategories, so we can use the same diagram in the linear context.

The naturality of ω and λ allows us to incorporate 2-cells $f \xRightarrow{\alpha} g$ into these diagrams.

Given a pair of linear functors $\mathbf{B} \xrightarrow{\mathsf{F},\mathsf{G}} \mathbf{C}$ and a pair of linear natural transformations $\mathbf{F} \xRightarrow{\omega,\lambda} \mathbf{G}$, a linear modification $\omega \xRightarrow{q} \lambda$ consists of a lax modification $\omega^{\otimes} \xRightarrow{q^{\otimes}} \lambda^{\otimes}$

and an opcolax modification $\lambda^{\oplus} \overset{q^{\oplus}}{\Longrightarrow} \omega^{\oplus}$ linked by the fact that for every 0-cell A the components

$$\omega^{\otimes}A \overset{q^{\otimes}A}{\Longrightarrow} \lambda^{\otimes}A \quad \text{and} \quad \lambda^{\oplus}A \overset{q^{\oplus}X}{\Longrightarrow} \omega^{\oplus}A$$

are 2-way linear mates.

The diagrams for opcolax modifications are obtained by rotating those for lax modifications by 180° (hence the triangles point upwards). The reader may get some idea of how this works from the following circuit representations of the two equations in the definition, and two (of the four) circuit equations that establish the 2-way linear mate relationship between $q^{\otimes}A$ and $q^{\oplus}A$.

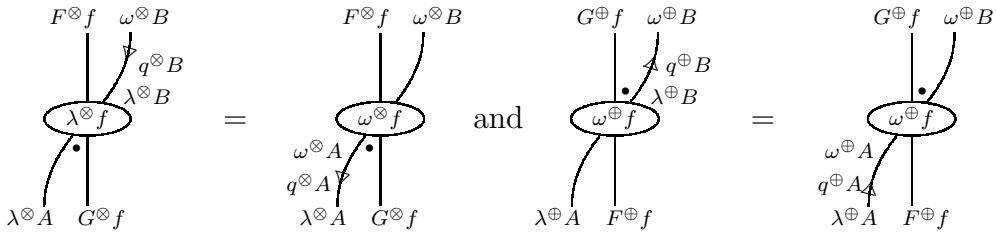

(51)

(52)

5.3. Example. As shown in [8], for the $\langle\, !\,, ?\,\rangle$ modalities (*cf.* Example 3.2(2)) in a symmetric linearly distributive category all the natural transformations are linear. For the product–coproduct linear functor the embedding/projection transformations are linear. Even more obviously, the initial and terminal maps are linear natural transformations.

Since $\omega^{\otimes}$ constitutes a lax natural transformation $F^{\otimes} \Longrightarrow G^{\otimes}$, while $\omega^{\oplus}$ is a opcolax natural transformation $G^{\oplus} \Longrightarrow F^{\oplus}$, we have an obvious component-wise composition of linear natural transformations: $\langle \omega^{\otimes}, \omega^{\oplus} \rangle \otimes \langle \lambda^{\otimes}, \lambda^{\oplus} \rangle = \langle \omega^{\otimes} \otimes \lambda^{\otimes}, \lambda^{\oplus} \oplus \omega^{\oplus} \rangle$. However, component-wise par-ing of $\omega^{\otimes}$ and $\lambda^{\otimes}$ does not work: the circuit diagram for the hypothetical multi-2-cell fails to satisfy the region criterion. Hence we are missing the desired second composition necessary for a linear bicategory.

5.4. Poly-modules from linear natural transformations.

5.5. Theorem. *Let* F, G, H *be linear functors from a closed linear bicategory* $\mathbf{P}$ *to a linear bicategory* $\mathbf{P}'$. *For a linear natural transformation* $\mathsf{F} \overset{\omega}{\Longrightarrow} \mathsf{G}$ *and a poly-module*

$\mathsf{G} \overset{\mathcal{M}}{\Longrightarrow} \mathsf{H}$, *there exists a poly-module* $\mathsf{F} \overset{\omega\oslash\mathcal{M}}{\Longrightarrow} \mathsf{H}$ *that maps* $B \xrightarrow{x} C$ *to* $\omega^{\otimes}B \otimes \mathcal{M}x$ *and operates on poly-2-cells in the following way*

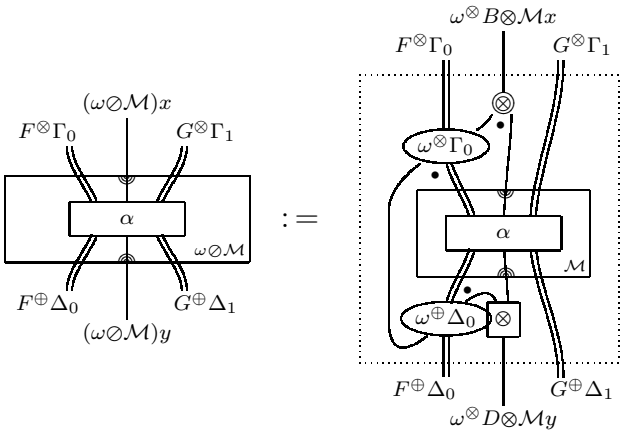

(53)

where the border of the module box for $\omega \oslash \mathcal{M}$ *on the left is the whole region between the module box for* $\mathcal{M}$ *and the dotted box on the right.*

Furthermore, if $\hat{\omega} := \omega \oslash \mathbb{T}_{\mathsf{G}}$*, the pair* $\hat{\omega}, \mathcal{M}$ *is representable and we may choose* $\hat{\omega} \boxtimes \mathcal{M} = \omega \oslash \mathcal{M}$*.*

Proof. It is easily seen that $\omega \oslash \mathcal{M}$ is indeed a poly-module.

Define the representing poly-module transformation $\hat{\omega}, \mathcal{M} \overset{\Phi}{\Longrightarrow} \omega \oslash \mathcal{M}$ as follows:

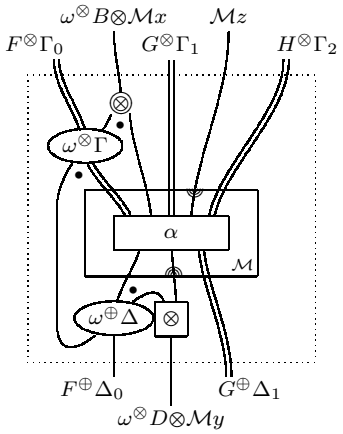

(54)

If a poly-module transformation Ψ has consecutive inputs $\mathsf{F} \overset{\hat{\omega}}{\Longrightarrow} \mathsf{G} \overset{\mathcal{M}}{\Longrightarrow} \mathsf{H}$, we wish to construct a poly-module transformation $\bar{\Psi}$ with these inputs contracted to $\omega \oslash \mathcal{M}$. Given a poly-2-cell β with appropriately chosen inputs and outputs, representability of units in $\mathbf{P}$ allows us to insert a new input $\top_B$ directly in front of the input g for $\mathcal{M}$. Now we may apply Ψ and recombine the appropriate inputs outside of the transformation box. This involves the introduction of a $G^{\otimes}$–box containing the representing multi-2-cell for $\top_B$. ∎

Similarly, for a poly-module $\mathsf{K} \xRightarrow{\mathcal{N}} \mathsf{G}$, we obtain a poly-module $\mathsf{K} \xRightarrow{\mathcal{N}\oslash\omega} \mathsf{F}$ that maps $B \xrightarrow{g} C$ to $\mathcal{N}g \oplus \omega^{\oplus}C$ and operates on poly-2-cells in a way that corresponds to flipping the right diagram in (53) vertically. We define $\check{\omega} := \perp\!\!\!\perp_{\mathsf{G}} \oslash \omega$. Note that we have a comparison between these actions, which is essentially given by linear distributivity: $\omega \oslash (\mathcal{M} \oslash \lambda) \Longrightarrow (\omega \oslash \mathcal{M}) \oslash \lambda$.

5.6. Corollary. *Under the hypotheses of Theorem 5.5, for linear natural transformations* $\mathsf{F} \xRightarrow{\omega} \mathsf{G}$ *and* $\mathsf{G} \xRightarrow{\lambda} \mathsf{H}$ *we may choose* $\hat{\omega} \boxtimes \hat{\lambda} = \omega \oslash \hat{\lambda}$ *and* $\check{\lambda} \boxplus \check{\omega} = \check{\lambda} \oslash \omega$. ∎

5.7. Remark. Note that $(\omega \otimes \lambda) \oslash \mathcal{M} \cong \omega \oslash (\lambda \oslash \mathcal{M})$ and dually $\mathcal{N} \oslash (\omega \oplus \lambda) \cong (\mathcal{N} \oslash \omega) \oslash \lambda$. Hence from the above we can conclude that $(\omega \otimes \lambda)\hat{} \cong \omega \oslash \hat{\lambda} \cong \hat{\omega} \boxtimes \hat{\lambda}$, and dually $(\omega \oplus \lambda)\check{} \cong \check{\omega} \oslash \lambda \cong \check{\omega} \boxplus \check{\lambda}$. In this sense the poly-module transformations $\hat{\omega}$ and $\check{\omega}$ are closed under tensor and par respectively.

5.8. Theorem. *If* $\mathbf{P} \xrightarrow{\mathsf{F},\mathsf{G}} \mathbf{P}'$ *are linear functors between linear bicategories, and if* $\mathbf{P}$ *has all adjoints, for every linear natural transformation* $\mathsf{F} \xRightarrow{\omega} \mathsf{G}$ *the poly-modules* $\hat{\omega}$ *and* $\check{\omega}$ *are cyclic adjoints.*

Proof. The generalized naturality of linear natural transformations implies that the ω–boxes can absorb functor boxes and merge as required for module boxes.

To establish the adjunction $\hat{\omega} \dashv\!\shortmid \check{\omega}$, consider the poly-module transformations that operate on poly-2-cells α with two chosen input positions, respectively on poly-2-cells β with two chosen output positions, in the following way

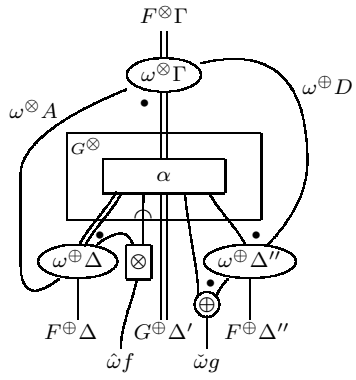

and

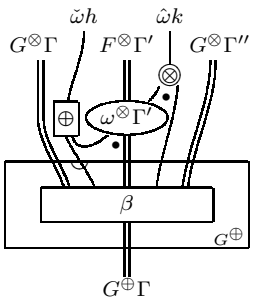

(55)

These are easily seen to constitute the unit and counit of the desired adjunction. The unit and counit for the other adjunction $\check{\omega} \dashv\!\shortmid \hat{\omega}$ arise by dualization (rotate the diagrams by 180°). ∎

So we have identified linear natural transformations with a sub-collection of cyclic adjoint poly-modules. It is not difficult to characterize such poly-modules; we shall sketch this (leaving the verification of details to the reader).

5.9. Proposition. *Suppose $\mathcal{M}$ is a cyclic poly-module $\mathsf{F} \Longrightarrow \mathsf{G}\colon \mathbf{P} \longrightarrow \mathbf{P}'$, satisfying the following.*

1. *There is a family of 1-cells $F(X) \xrightarrow{\omega^{\otimes} X} G(X)$ with cyclic adjoints, indexed by 0-cells X of $\mathbf{P}$.*
2. *For any 1-cell $X \xrightarrow{x} Y$ of $\mathbf{P}$, $\mathcal{M}(x) = \omega^{\otimes} X \otimes G^{\otimes}(x)$.*
3. *For any multi-2-cell $x \otimes \Gamma \xRightarrow{\alpha} Y$ of $\mathbf{P}$, $\mathcal{M}_l(\alpha) = \omega^{\otimes} X \otimes G^{\otimes}(\alpha)$, where by $\mathcal{M}_l(\alpha)$ we mean that the principal input port is on the left (x) wire.*

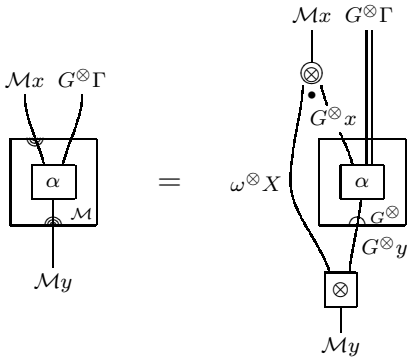

(56)

Then there is a linear natural transformation ω so that $\mathcal{M} = \hat{\omega}$.

Of course, any module of the form $\hat{\omega}$ satisfies the conditions of this proposition. Note also that modules of the form $\check{\omega}$ are just the cyclic duals of modules of the form given by the proposition.

Proof. (Sketch) The main point is to notice that the data above is sufficient to allow one to define $\omega^{\otimes} x$ in general. For a 1-cell $X \xrightarrow{x} Y$, we define $\omega^{\otimes} x =$

$$F^{\otimes} x \otimes \omega^{\otimes} Y \Longrightarrow F^{\otimes} x \otimes \omega^{\otimes} Y \otimes G^{\otimes} \top \xRightarrow{=} F^{\otimes} x \otimes \mathcal{M} \top \Longrightarrow \mathcal{M} x \xRightarrow{=} \omega^{\otimes} X \otimes G^{\otimes} x$$

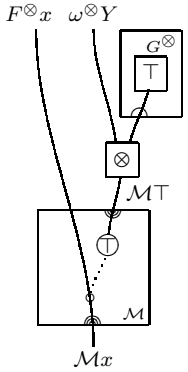

(57)

With this it is easy to show that we have the data for a lax natural transformation $\omega^{\otimes}$, and that equation (47) is satisfied. We have sufficient closed structure to then define the rest of the linear natural transformation ω by duality, and it is a straightforward calculation that $\mathcal{M} = \hat{\omega}$. ∎

Finally, we note that not all cyclic adjoint poly-modules can arise by means of linear natural transformations, (*e.g.* otherwise one could form the par of any two linear natural transformations), which confirms our suspicion that the notion of linear natural transformation is too narrow, and that poly-modules are at the correct level of generality.

Recall that the definition of a linear natural transformation (subsection 5.1) involved a choice of the direction of the 2-cells $\omega^{\otimes} f$ and $\omega^{\oplus} f$. In principle, the other choice is also possible, flipping the circuits of Diagram (45) vertically. The corresponding "linear op-natural transformations" are closed under $\oplus$ but not under $\otimes$.

5.10. Example. Consider a linear natural transformation ω from the identity linear functor on a linear bicategory $\mathbf{B}$ to itself with the property that for every 1-cell $A \xrightarrow{f} B$ the 2-cells $\omega^{\otimes} f$ and $\omega^{\oplus} f$ are isomorphisms. We may interpret the corresponding cyclic linear adjoint endo-1-cells $\omega^{\otimes} A$ and $\omega^{\oplus} A$ as "central". Call such a linear natural transformation a *linear braiding*. If $\mathbf{B}$ is the suspension of a linearly distributive category $\mathbf{V}$, the collection of central 1-cells reduces to a cyclic linear adjoint "central object" of $\mathbf{V}$. Call $\mathbf{V}$ *linearly braided*, if for every object a there exists a linear braiding $[a]$ making a central and if these linear braidings are compatible in the sense that $([a]^{\otimes} f \otimes b)\ ;\ (a \otimes [b]^{\otimes} f) = [a \otimes b]^{\otimes} f$, and dually for the par-components, which corresponds to the first axiom for braidings. The second axiom corresponds to the naturality of these transformations.

In the degenerate case of $\oplus = \otimes$ we recover more than the usual notion of braided monoidal category, since all objects have to be cyclic adjoints, in addition to being central.

Appendix

Axioms for linear natural transformations

We have indicated (in Remark 5.2) the equations necessary for a linear natural transformation $\mathsf{F} \xRightarrow{\omega} \mathsf{G}$, but it may be useful for the reader to have these spelled out more precisely.

We begin with the equations that express $\omega^{\otimes}$ is a lax natural transformation.

$$\begin{aligned}
& F^{\otimes}(A) \otimes F^{\otimes}(B) \otimes \omega^{\otimes} Z \\
& \quad \xRightarrow{m^{\otimes} \otimes 1} \quad F^{\otimes}(A \otimes B) \times \omega^{\otimes} Z \\
& \quad \xRightarrow{\omega^{\otimes} A \otimes B} \quad \omega^{\otimes} X \otimes G^{\otimes}(A \otimes B) \\
= \ & F^{\otimes}(A) \otimes F^{\otimes}(B) \otimes \omega^{\otimes} Z \\
& \quad \xRightarrow{1 \otimes \omega^{\otimes} B} \quad F^{\otimes}(A) \otimes \omega^{\otimes} Y \otimes G^{\otimes}(B) \\
& \quad \xRightarrow{\omega^{\otimes} \otimes 1} \quad \omega^{\otimes} X \otimes G^{\otimes}(A) \otimes G^{\otimes}(B) \\
& \quad \xRightarrow{1 \otimes n^{\otimes}} \quad \omega^{\otimes} X \otimes G^{\otimes}(A \otimes B) \\
& \qquad\qquad : F(X) \longrightarrow G(Z)
\end{aligned} \tag{58}$$

$$
\begin{array}{rll}
 & \omega^{\otimes}X & \xRightarrow{u_L^{\otimes}} \quad \top_{F^{\otimes}(X)} \otimes \omega^{\otimes}X \\
 & & \xRightarrow{m^{\top}\otimes 1} \quad F^{\otimes}(\top_X) \otimes \omega^{\otimes}X \\
 & & \xRightarrow{\omega^{\otimes}\top_X} \quad \omega^{\otimes}X \otimes G(\top_X) \\
= & \omega^{\otimes}X & \xRightarrow{u_R^{\otimes}} \quad \omega^{\otimes}X \otimes \top_{G^{\otimes}(X)} \\
 & & \xRightarrow{1\otimes n^{\top}} \quad \omega^{\otimes}X \otimes G^{\otimes}(\top_X) \\
 & & : F(X) \longrightarrow G(X)
\end{array}
\tag{59}
$$

There are dual equations which express that $\omega^{\oplus}$ is opcolax; we leave these to the reader.

Next there are the naturality equations which correspond to circuit equation (49).

$$
\begin{array}{rll}
 & F^{\otimes}(A \oplus B) \otimes \omega^{\otimes}Z & \\
 & \xRightarrow{\nu_R^{\otimes}\otimes 1} \quad (F^{\oplus}(A) \oplus F^{\otimes}(B)) \otimes \omega^{\otimes}Z & \\
 & \xRightarrow{\delta_R} \quad F^{\oplus}(A) \oplus (F^{\otimes}(B) \otimes \omega^{\otimes}Z) & \\
 & \xRightarrow{1\oplus\omega^{\otimes}B} \quad F^{\oplus}(A) \oplus (\omega^{\otimes}Y \otimes G^{\otimes}(B)) & \\
= & F^{\otimes}(A \oplus B) \otimes \omega^{\otimes}Z & \\
 & \xRightarrow{\omega^{\otimes}A\oplus B} \quad \omega^{\otimes}X \otimes G^{\otimes}(A \oplus B) & \\
 & \xRightarrow{1\otimes\nu_R^{\otimes}} \quad \omega^{\otimes}X \otimes (G^{\oplus}(A) \oplus G^{\otimes}(B)) & \\
 & \xRightarrow{1\otimes 1\oplus u_L^{\otimes}} \quad \omega^{\otimes}X \otimes (G^{\oplus}(A) \oplus (\top \otimes G^{\otimes}(B))) & \\
 & \xRightarrow{1\otimes 1\oplus\tau\otimes 1} \quad \omega^{\otimes}X \otimes (G^{\oplus}(A) \oplus ((\omega^{\oplus}Y \oplus \omega^{\otimes}Y) \otimes G^{\otimes}(B))) & \\
 & \xRightarrow{1\oplus\delta_R} \quad \omega^{\otimes}X \otimes ((G^{\oplus}(A) \oplus \omega^{\oplus}Y) \oplus (\omega^{\otimes}Y \otimes G^{\otimes}(B))) & \\
 & \xRightarrow{1\otimes\omega^{\oplus}A\oplus 1} \quad \omega^{\otimes}X \otimes ((\omega^{\oplus}X \oplus F^{\oplus}(A)) \oplus (\omega^{\otimes}Y \otimes G^{\otimes}(B))) & \\
 & \xRightarrow{\delta_L;\delta_L\oplus 1} \quad (\omega^{\otimes}X \otimes \omega^{\oplus}X) \oplus F^{\oplus}(A) \oplus (\omega^{\otimes}Y \otimes G^{\otimes}(B)) & \\
 & \xRightarrow{\gamma\oplus 1\oplus 1} \quad \bot \oplus F^{\oplus}(A) \oplus (\omega^{\otimes}Y \otimes G^{\otimes}(B)) & \\
 & \xRightarrow{u_L^{\oplus}} \quad F^{\oplus}(A) \oplus (\omega^{\otimes}Y \otimes G^{\otimes}(B)) & \\
 & : F(X) \longrightarrow G(Z) &
\end{array}
\tag{60}
$$

$$
\begin{aligned}
& F^{\otimes}(A \oplus B) \\
& \quad \xRightarrow{\nu_L^{\otimes}} \quad F^{\otimes}(A) \otimes F^{\oplus}(B) \\
& \quad \xRightarrow{u_R^{\otimes} \oplus 1} \quad (F^{\otimes}(A) \otimes \top) \oplus F^{\oplus}(B) \\
& \quad \xRightarrow{1 \otimes \tau \oplus 1} \quad (F^{\otimes}(A) \otimes (\omega^{\otimes} Y \oplus \omega^{\oplus} Y)) \oplus F^{\oplus}(B) \\
& \quad \xRightarrow{\delta_L \oplus 1} \quad ((F^{\otimes}(A) \otimes \omega^{\otimes} Y) \oplus \omega^{\oplus} Y) \oplus F^{\oplus}(B) \\
& \quad \xRightarrow{\omega^{\otimes} A \oplus 1 \oplus 1} \quad (\omega^{\otimes} X \otimes G^{\otimes}(A)) \oplus \omega^{\oplus} Y \oplus F^{\oplus}(B) \\
= \; & F^{\otimes}(A \oplus B) \\
& \quad \xRightarrow{u_R^{\otimes}} \quad F^{\otimes}(A \oplus B) \otimes \top \\
& \quad \xRightarrow{1 \otimes \tau} \quad F^{\otimes}(A \oplus B) \otimes (\omega^{\otimes} Z \oplus \omega^{\oplus} Z) \\
& \quad \xRightarrow{\delta_L} \quad (F^{\otimes}(A \oplus B) \otimes \omega^{\otimes} Z) \oplus \omega^{\oplus} Z \\
& \quad \xRightarrow{\omega^{\otimes} A \oplus B \oplus 1} \quad (\omega^{\otimes} X \otimes G^{\otimes}(A \oplus B)) \oplus \omega^{\oplus} Z \\
& \quad \xRightarrow{1 \otimes \nu_L^{\otimes} \oplus 1} \quad (\omega^{\otimes} X \otimes (G^{\otimes}(A) \oplus G^{\oplus}(B))) \oplus \omega^{\oplus} Z \\
& \quad \xRightarrow{\delta_L \oplus 1} \quad (\omega^{\otimes} X \otimes G^{\otimes}(A)) \oplus G^{\oplus}(B) \oplus \omega^{\oplus} Z \\
& \quad \xRightarrow{1 \oplus \omega^{\oplus} B} \quad (\omega^{\otimes} X \otimes G^{\otimes}(A)) \oplus \omega^{\oplus} Y \oplus F^{\oplus}(B) \\
& \quad : F(X) \longrightarrow F(Z)
\end{aligned}
\tag{61}
$$

And there are dual equations:

$$
\begin{aligned}
& (G^{\oplus}(A) \oplus \omega^{\oplus} Y) \otimes F^{\otimes}(B) \\
& \quad \xRightarrow{\omega^{\oplus} A \otimes 1} \quad (\omega^{\oplus} X \oplus F^{\oplus}(A)) \otimes F^{\otimes}(B) \\
& \quad \xRightarrow{\delta_R} \quad \omega^{\oplus} X \oplus (F^{\oplus}(A) \otimes F^{\otimes}(B)) \\
& \quad \xRightarrow{1 \oplus \nu_L^{\oplus}} \quad \omega^{\oplus} X \oplus F^{\oplus}(A \otimes B) \\
= \; & (G^{\oplus}(A) \oplus \omega^{\oplus} Y) \otimes F^{\otimes}(B) \\
& \quad \xRightarrow{1 \otimes u_R^{\otimes}} \quad (G^{\oplus}(A) \oplus \omega^{\oplus} Y) \otimes F^{\otimes}(B) \otimes \top_Y \\
& \quad \xRightarrow{1 \otimes 1 \otimes \tau} \quad (G^{\oplus}(A) \oplus \omega^{\oplus} Y) \otimes F^{\otimes}(B) \otimes (\omega^{\otimes} Z \oplus \omega^{\oplus} Z) \\
& \quad \xRightarrow{1 \otimes \delta_L ; \delta_R} \quad ((G^{\oplus}(A) \oplus \omega^{\oplus} Y) \otimes F^{\otimes}(B) \otimes \omega^{\otimes} Z) \oplus \omega^{\oplus} Z \\
& \quad \xRightarrow{1 \otimes \omega^{\otimes} B \oplus 1} \quad (G^{\oplus}(A) \oplus \omega^{\oplus} Y) \otimes (\omega^{\otimes} Y \otimes G^{\otimes}(B)) \oplus \omega^{\oplus} Z \\
& \quad \xRightarrow{\delta_R \otimes 1 \oplus 1} \quad ((G^{\oplus}(A) \oplus (\omega^{\oplus} Y \otimes \omega^{\otimes} Y)) \otimes G^{\otimes}(B)) \oplus \omega^{\oplus} Z \\
& \quad \xRightarrow{1 \oplus \gamma \otimes 1 \oplus 1} \quad ((G^{\oplus}(A) \oplus \bot) \otimes G^{\otimes}(B)) \oplus \omega^{\oplus} Z \\
& \quad \xRightarrow{u_L^{\oplus} \otimes 1 \oplus 1} \quad (G^{\oplus}(A) \otimes G^{\otimes}(B)) \oplus \omega^{\oplus} Z \\
& \quad \xRightarrow{\nu_L^{\oplus} \oplus 1} \quad G^{\oplus}(A \otimes B) \oplus \omega^{\oplus} Z \\
& \quad \xRightarrow{\omega^{\oplus} A \oplus B} \quad \omega^{\oplus} X \oplus F^{\oplus}(A \otimes B) \\
& \quad : G(X) \longrightarrow F(Z)
\end{aligned}
\tag{62}
$$

$$
\begin{array}{rll}
& F^{\otimes}(A) \otimes \omega^{\otimes} Y \otimes (G^{\oplus}(B) \oplus \omega^{\oplus} Z) & \\
& \quad \xRightarrow{1 \otimes 1 \otimes \omega^{\oplus} B} & F^{\otimes}(A) \otimes \omega^{\otimes} Y \otimes (\omega^{\oplus} Y \oplus F^{\oplus}(B)) \\
& \quad \xRightarrow{1 \otimes \delta_L} & F^{\otimes}(A) \otimes ((\omega^{\otimes} Y \otimes \omega^{\oplus} Y) \oplus F^{\oplus}(B)) \\
& \quad \xRightarrow{1 \otimes \gamma \oplus 1} & F^{\otimes}(A) \otimes (\bot \oplus F^{\oplus}(B)) \\
& \quad \xRightarrow{1 \otimes u_L^{\oplus}} & F^{\otimes}(A) \otimes F^{\oplus}(B) \\
& \quad \xRightarrow{\nu_R^{\otimes}} & F^{\oplus}(A \otimes B) \\
= & F^{\otimes}(A) \otimes \omega^{\otimes} Y \otimes (G^{\oplus}(B) \oplus \omega^{\oplus} Z) & \\
& \quad \xRightarrow{\omega^{\otimes} A \otimes 1} & \omega^{\otimes} X \otimes G^{\otimes}(A) \otimes (G^{\oplus}(B) \oplus \omega^{\oplus} Z) \\
& \quad \xRightarrow{1 \otimes \delta_L} & \omega^{\otimes} X \otimes ((G^{\otimes}(A) \otimes G^{\oplus}(B)) \oplus \omega^{\oplus} Z) \\
& \quad \xRightarrow{1 \otimes \nu_R^{\oplus}} & \omega^{\otimes} X \otimes (G^{\oplus}(A \otimes B) \oplus \omega^{\oplus} Z) \\
& \quad \xRightarrow{1 \otimes \omega^{\oplus}(A \otimes B)} & \omega^{\otimes} X \otimes (\omega^{\oplus} X \oplus F^{\oplus}(A \otimes B)) \\
& \quad \xRightarrow{\delta_L} & (\omega^{\otimes} X \otimes \omega^{\oplus} X) \oplus F^{\oplus}(A \otimes B) \\
& \quad \xRightarrow{\gamma \oplus 1} & \bot \oplus F^{\oplus}(A \otimes B) \\
& \quad \xRightarrow{u_L^{\oplus}} & F^{\oplus}(A \otimes B) \\
& & : F(X) \longrightarrow F(Z)
\end{array}
\tag{63}
$$

Finally, we have the usual categorical (as opposed to "poly-categorical") naturality conditions: for a 2-cell $f : A \Longrightarrow B : X \longrightarrow Y$

$$
\begin{array}{rll}
& F^{\otimes}(A) \otimes \omega^{\otimes} Y & \xRightarrow{F^{\otimes}(f) \otimes 1} \quad F^{\otimes}(B) \otimes \omega^{\otimes} Y \\
& & \xRightarrow{\omega^{\otimes} B} \quad \omega^{\otimes} X \otimes G^{\otimes}(B) \\
= & F^{\otimes}(A) \otimes \omega^{\otimes} Y & \xRightarrow{\omega^{\otimes} A} \quad \omega^{\otimes} X \otimes G^{\otimes}(A) \\
& & \xRightarrow{1 \otimes G^{\otimes}(f)} \quad \omega^{\otimes} X \otimes G^{\otimes}(B) \\
& & : F(X) \longrightarrow G(Y)
\end{array}
\tag{64}
$$

$$
\begin{array}{rll}
& G^{\oplus}(A) \otimes \omega^{\oplus} Y & \xRightarrow{G^{\oplus}(f) \otimes 1} \quad G^{\oplus}(B) \otimes \omega^{\oplus} Y \\
& & \xRightarrow{\omega^{\oplus} B} \quad \omega^{\oplus} X \otimes F^{\oplus}(B) \\
= & G^{\oplus}(A) \otimes \omega^{\oplus} Y & \xRightarrow{\omega^{\oplus} A} \quad \omega^{\oplus} X \otimes F^{\oplus}(A) \\
& & \xRightarrow{1 \otimes F^{\oplus}(f)} \quad \omega^{\oplus} X \otimes F^{\oplus}(B) \\
& & : G(X) \longrightarrow F(Y)
\end{array}
\tag{65}
$$

References

[1] Benabou, J. Introduction to bicategories. In *Reports of the Midwest Category Seminar* 1, vol. 47 of *LNM*. Springer-Verlag, Berlin – New York, 1967, pp. 1–77.

[2] Blute, R. F., Cockett, J. R. B., Seely, R. A. G., and Trimble, T. H. Natural deduction and coherence for weakly distributive categories. *J. Pure Appl. Algebra 113* (1996), 229–296.

[3] Blute, R. F., Cockett, J. R. B., and Seely, R. A. G. The logic of linear functors. *Math. Structures Comput. Sci. 12*(2002), 513 – 539.

[4] Bourbaki, N. *Algébre multilinéaire*. Hermann, Paris, 1948.

[5] Chu, P.-H. *Constructing $*$–autonomous categories*, vol. 752 of *LNM*. Springer-Verlag, Berlin – New York, 1979, pp. 103–137.

[6] Cockett, J. R. B., Koslowski, J., and Seely, R. A. G. Introduction to linear bicategories. *Math. Structures Comput. Sci. 10* (2000), 165–203.

[7] Cockett, J. R. B., and Seely, R. A. G. Weakly distributive categories. In *Applications of Categories to Computer Science* (1992), M. P. Fourman, P. T. Johnstone, and A. M. Pitts, Eds., vol. 177 of *London Mathematical Society Lecture Note Series*, Cambridge University Press, pp. 45–65.

[8] Cockett, J. R. B., and Seely, R. A. G. Linearly distributive functors. *J. Pure Appl. Algebra 143* (1999), 155–203.

[9] Cockett, J. R. B., Koslowski, J, Seely, R. A. G., and Wood, R. Modules. (in preparation).

[10] Davey, B. A., and Davis, G. Tensor products and entropic varieties. *Algebra Universalis 21* (1985), 68–88.

[11] Gordon, R., Power, A. J., and Street, R. *Coherence for Tricategories*, vol. 558 of *Memoirs of the AMS*. AMS, Providence, RI, 1995.

[12] Gray, J. W. *Formal Category Theory: Adjointness for 2–Categories*. vol. 391 of *LNM*, Springer-Verlag, Berlin – New York, 1970.

[13] Hermida, C. Representable multicategories. University of Sydney, June 1999.

[14] Kelly, G. M., and Street, R. H. Review of the elements of 2-categories. In *Proceedings of the Sydney Category Seminar*, vol. 420 of *LNM*. Springer-Verlag, Berlin – New York, 1974, pp. 75–103.

[15] Koslowski, J. Monads and interpolads in bicategories. *Theory and Applications of Categories 3*, 8 (1997), 182–212.

[16] Koslowski, J. A 2-dimensional view of the chu construction. Invited talk at the Workshop on Chu Spaces, LICS 2000, UCSB, June 25, 2000.

[17] Koslowski, J. Beyond the chu construction. *Applied Categorical Structures 9*, 2 (2001), 153–171.

[18] Lack, S. and Street, R. The formal theory of monads II. *J. Pure Appl. Algebra* (to appear)

[19] Lambek, J. Deductive systems and categories II. In *Category Theory, Homology Theory and their Applications I* (1968), vol. 86 of *LNM*, Springer-Verlag, Berlin – New York, 1969, pp. 76–122.

[20] Leinster, T. fc-multicategories. Talk given at PSSL 70 in Cambridge, February 1999.

[21] Retoré, C. Pomset logic: a non-commutative extension of classical linear logic. In *TLCA'97* (1997), vol. 1210 of *LNCS*, Springer-Verlag, Berlin, 1984, pp. 300–318.

[22] Schneck, R. R. Natural deduction and coherence for non-symmetric linearly distributive categories. *Theory Appl. Categ. 6*, 9 (1999), 105–146.

[23] Street, R. Limits indexed by category-valued 2-functors. *J. Pure Appl. Algebra* 8 (1976), 149–181.

[24] Street, R. Categorical structures. *Handbook of Algebra* Volume 1, editor M. Hazewinkel; Elsevier Science, Amsterdam 1996, 529–577.

[25] Street, R., and Walters, R. F. C. Yoneda structures on 2-categories. *Journal of Algebra 50* (1978), 350–379.

[26] Szabo, M. E. Polycategories. *Comm. Algebra 3* (1975), 663–689.

[27] Walters, R. F. C. Sheaves and Cauchy complete categories. *Cahiers Topologie Géom. Différentielle 22* (1981), 282–286.

Department of Computer Science, University of Calgary,
2500 University Drive, Calgary, AL, T2N 1N4, Canada

Institut für theoretische Informatik, TU Braunschweig,
Postfach 3329, D-38023 Braunschweig, Germany

Department of Mathematics, McGill University,
805 Sherbrooke St., Montréal, QC, H3A 2K6, Canada

Email: robin@cpsc.ucalgary.ca
koslowj@iti.cs.tu-bs.de
rags@math.mcgill.ca

This article may be accessed via WWW at http://www.tac.mta.ca/tac/ or by anonymous ftp at ftp://ftp.tac.mta.ca/pub/tac/html/volumes/11/2/11-02.{dvi,ps}

THEORY AND APPLICATIONS OF CATEGORIES (ISSN 1201-561X) will disseminate articles that significantly advance the study of categorical algebra or methods, or that make significant new contributions to mathematical science using categorical methods. The scope of the journal includes: all areas of pure category theory, including higher dimensional categories; applications of category theory to algebra, geometry and topology and other areas of mathematics; applications of category theory to computer science, physics and other mathematical sciences; contributions to scientific knowledge that make use of categorical methods.

Articles appearing in the journal have been carefully and critically refereed under the responsibility of members of the Editorial Board. Only papers judged to be both significant and excellent are accepted for publication.

The method of distribution of the journal is via the Internet tools `WWW/ftp`. The journal is archived electronically and in printed paper format.

SUBSCRIPTION INFORMATION. Individual subscribers receive (by e-mail) abstracts of articles as they are published. Full text of published articles is available in .dvi, Postscript and PDF. Details will be e-mailed to new subscribers. To subscribe, send e-mail to `tac@mta.ca` including a full name and postal address. For institutional subscription, send enquiries to the Managing Editor, Robert Rosebrugh, `rrosebrugh@mta.ca`.

INFORMATION FOR AUTHORS. The typesetting language of the journal is TEX, and LATEX is the preferred flavour. TEX source of articles for publication should be submitted by e-mail directly to an appropriate Editor. They are listed below. Please obtain detailed information on submission format and style files from the journal's WWW server at `http://www.tac.mta.ca/tac/`. You may also write to `tac@mta.ca` to receive details by e-mail.

EDITORIAL BOARD.
John Baez, University of California, Riverside: `baez@math.ucr.edu`
Michael Barr, McGill University: `barr@barrs.org`, *Associate Managing Editor*
Lawrence Breen, Université Paris 13: `breen@math.univ-paris13.fr`
Ronald Brown, University of Wales Bangor: `r.brown@bangor.ac.uk`
Jean-Luc Brylinski, Pennsylvania State University: `jlb@math.psu.edu`
Aurelio Carboni, Università dell Insubria: `aurelio.carboni@uninsubria.it`
Valeria de Paiva, Palo Alto Research Center: `paiva@parc.xerox.com`
Martin Hyland, University of Cambridge: `M.Hyland@dpmms.cam.ac.uk`
P. T. Johnstone, University of Cambridge: `ptj@dpmms.cam.ac.uk`
G. Max Kelly, University of Sydney: `maxk@maths.usyd.edu.au`
Anders Kock, University of Aarhus: `kock@imf.au.dk`
Stephen Lack, University of Sydney: `stevel@maths.usyd.edu.au`
F. William Lawvere, State University of New York at Buffalo: `wlawvere@buffalo.edu`
Jean-Louis Loday, Université de Strasbourg: `loday@math.u-strasbg.fr`
Ieke Moerdijk, University of Utrecht: `moerdijk@math.uu.nl`
Susan Niefield, Union College: `niefiels@union.edu`
Robert Paré, Dalhousie University: `pare@mathstat.dal.ca`
Robert Rosebrugh, Mount Allison University: `rrosebrugh@mta.ca`, *Managing Editor*
Jiri Rosicky, Masaryk University: `rosicky@math.muni.cz`
James Stasheff, University of North Carolina: `jds@math.unc.edu`
Ross Street, Macquarie University: `street@math.mq.edu.au`
Walter Tholen, York University: `tholen@mathstat.yorku.ca`
Myles Tierney, Rutgers University: `tierney@math.rutgers.edu`
Robert F. C. Walters, University of Insubria: `robert.walters@uninsubria.it`
R. J. Wood, Dalhousie University: `rjwood@mathstat.dal.ca`